TG5-6-00

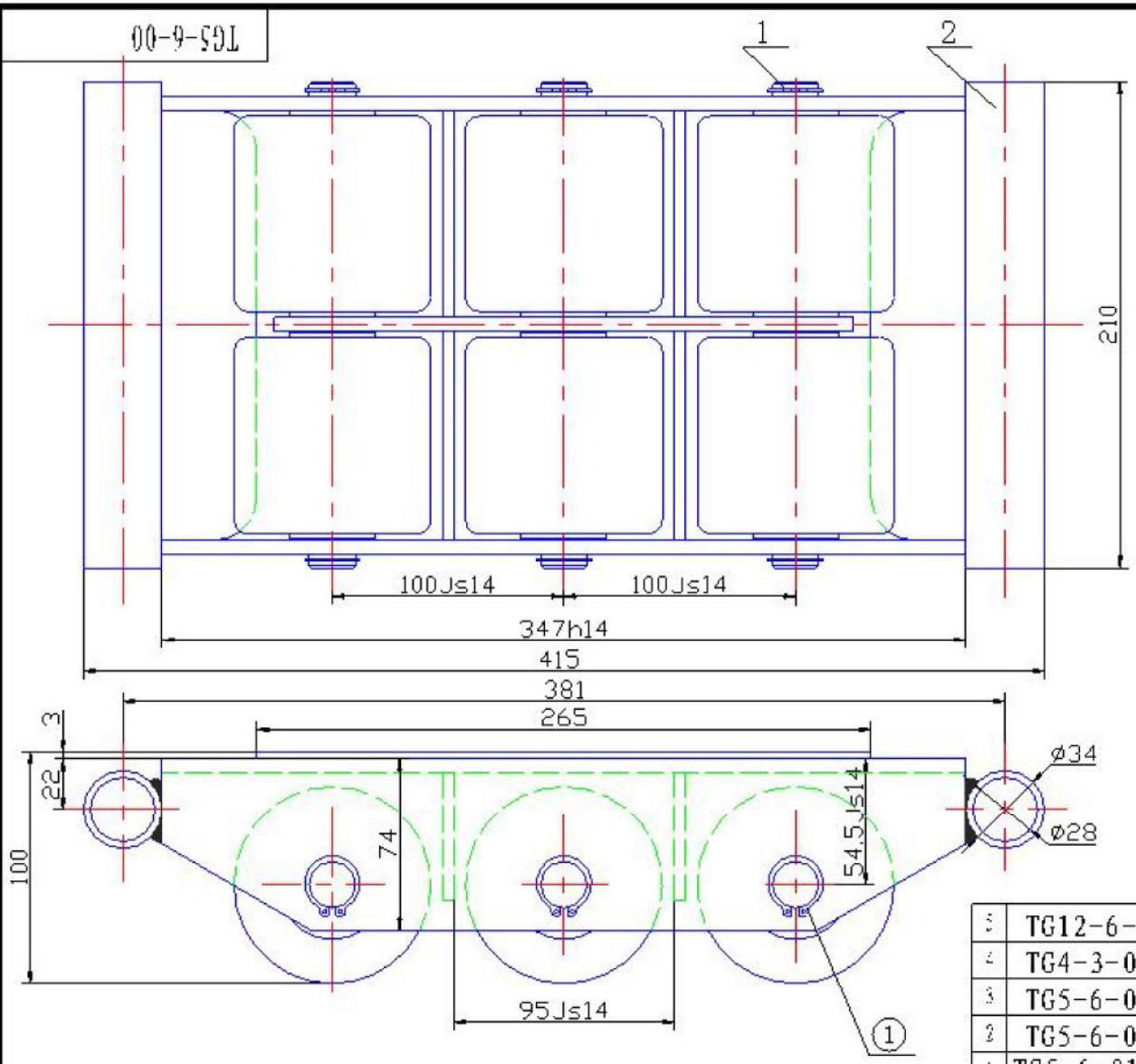

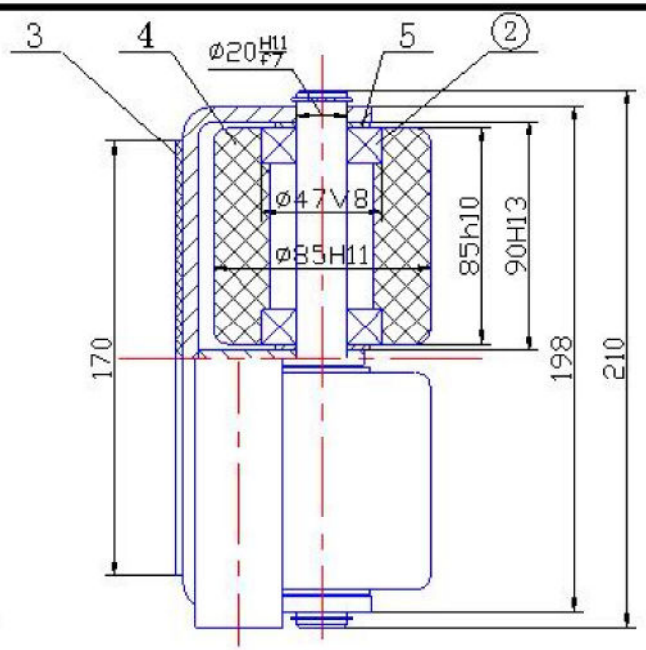

Technical Requirement

1. Clean all the parts before assembling.
2. Part 1 and part 3 should be glued together by neoprene glue.
3. Capacity: 6 tonne.

NO	CODE NO	DESCRIPTIONS	Q'TY	MATERIAL	MASS	REMARKS
5	TG12-6-06	Washer	12	Q235A		
4	TG4-3-03	Roller	6	Nylon 6		
3	TG5-6-03	Rubber sheet	1	1613 Rubber sheet		Black
2	TG5-6-02	Shaft	3	45		Zinc-plated
1	TG5-6-01.0	Frame	1			Baking finish

NO	CODE NO	DESCRIPTIONS	Q'TY	MATERIAL	MASS	REMARKS
②	GB278-82	Bearing 80204	12			
①	GB894.1-86	Retaining Ring 20	6	65Mn		Blackened

MARK	Q'TY	DESIGN NUMBER	SIGNATURE	DATE	
DESIGNED		TECHNICAL		DRAWING NO.	Q'TY	MASS	SCALE
CHECKED BY		STANDARDIZED BY			1		1:2
APPROVED BY		APPROVED					
CONFIRMED BY		DATE		TOTAL PAGES		SHEET	