Yale *UNOplus*
ARCTIC EDITION *Series A*

Ratchet lever hoist

Capacity 750 - 6000 kg

With the Yale *ARCTIC EDITION* the field of application of the tried and tested Yalelift 360 manual hand chain hoist can now be expanded to applications under extreme low temperatures.

Care was taken to ensure that all functions, especially its innovative 360° hand chain guide, function optimally and safely even under extreme temperatures. The materials and lubricants used were adapted to the requirements and tested and certified in complex low-temperature test procedures.

This allows the user to work safely and productively with the Yalelift 360 even at temperatures down to -40°C, whereas standard hoists without these measures may only be used down to -20°C (DIN EN13157 Cranes - Safety - hand-operated cranes).

In addition to static tests, dynamic low-temperature tests were also carried out to rule out malfunctions and material failure.

We can confirm the user's suitability with a certificate.







INFO

Standard hoists according to EN13157
(cranes - safety - hand operated cranes)

5.1.12 Temperature
Hand chain blocks and their components shall be capable of operating within an ambient temperature range of -10°C to +50°C unless another temperature range is agreed between the manufacturer and the purchaser. Standard hoist products from CMCO are suitable for a temperature range of -20°C to +50°C!

Technical data *UNOplus-A ARCTIC EDITION*

Model	Art.-No.	Capacity kg	Number of chain falls	Chain dimensions d x p in mm/ design	Lift with one full lever turn mm	Handle pull at WLL daN	Weight at standard lift (1.5 m) kg
UNOplus-A* 750 *ARCTIC EDITION	192099226	750	1	5.6 x 17.1 - T	27	22	6.3
UNOplus-A* 1500 *ARCTIC EDITION	192099227	1500	1	7.1 x 21 - T	22	35	9.2
UNOplus-A* 3000 *ARCTIC EDITION	192099228	3000	1	10 x 28 - V	20	40	16.9
UNOplus-A* 6000 *ARCTIC EDITION	192099229	6000	2	10 x 28 - V	10	43	28.6

Dimensions *UNOplus-A ARCTIC EDITION*

Model	*UNOplus-A* 750 *ARCTIC EDITION*	*UNOplus-A* 1500 *ARCTIC EDITION*	*UNOplus-A* 3000 *ARCTIC EDITION*	*UNOplus-A* 6000 *ARCTIC EDITION*
A min., mm	312	375	445	563
B, mm	20	26	37	45
C, mm	27	31	40	47
D, mm	18	21	28	35
E, mm	267	267	376	376
F, mm	121	146	180	232
G, mm	40	51	57	71
H, mm	81	95	123	161
J, mm	144	164	193	193
K, mm	53	68	83	83
L, mm	91	96	110	110

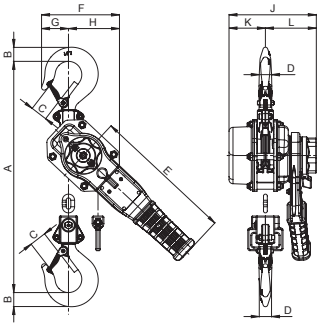

UNOplus-A ARCTIC EDITION,
750 - 3000 kg, single fall

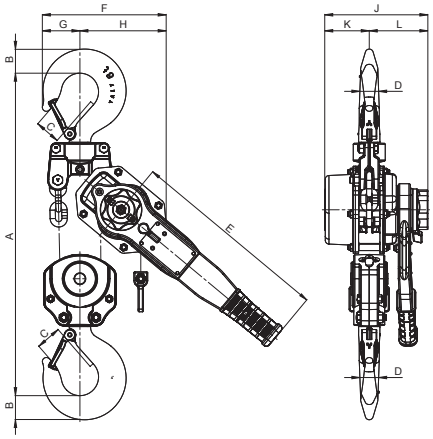

UNOplus-A ARCTIC EDITION,
6000 kg, double fall



COMPACT & TRANSPORTABLE

UNIVERSALLY USABLE & USER FRIENDLY

LIGHTWEIGHT & CAN BE USED IN THE SMALLEST AREAS.