

HU 20-115 VATP ATEX PROLINE Hand pallet truck, stainless steel version

Capacity 2000 kg

The hand pallet truck is designed for the use in explosive environments (zone 1 and 2).

Features

- Ergonomic safety control handle for one-hand operation of lifting, driving and lowering.
- Low maintenance high performance hydraulic pump with hard chromium plated piston and pressure relief valve. Hydraulic unit made of V4A-316 stainless steel.
- Frame, adjustable connecting rods, bolts and the torsion tube are made of high quality V4A-316 stainless steel.
- Steering angle of 105 degree to each side for easy handling in confined spaces.
- Conductive steering rollers (antistatic).

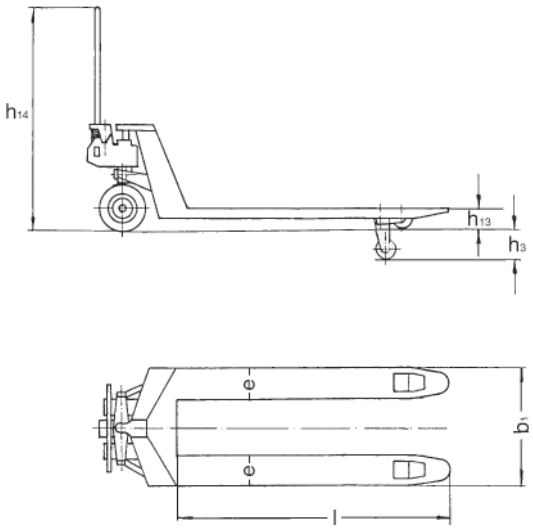

Technical data
HU 20-115 VATP ATEX PROLINE MEDIUM

II 2 G Ex h IIB T6 Gb /
II 2 D Ex h IIIB T85 °C Db

Model	HU 20-115 VATP ATEX PL
Art.-No.	040054147
Capacity, kg	2000
Weight, kg	86
Tyre type [1]	VG/PA
Steering rollers, mm	200 x 50
Load rollers, mm	82 x 70
Stroke h3, mm	115
Height of control handle h14, mm	1200
Fork height lowered h13, mm	85
Fork width e, mm	160
Fork length l, mm	1150
Outside dimension of forks b1, mm	540

[1] VG ... Solid rubber, PA ... Polyamide

INFO

Before the use in explosive environments the operator has to create an explosion protection document acc. to the machinery directive 1999/92/EG!