

- TZR with digital display and radio control

The load indicator can be operated via radio control. The displayed values can be taken off the remote control device and can be transmitted to a PC. The system can be combined with an easy-to-read display.
Several measured values can be totalled and saved.

Features

- TZR load indicator has the same features like the model TZL plus.
- Remote control and data exchange via radio transmission.
- USB interface
- Accumulation memory

Optional

- External easy-to-read display.

Scope of delivery

- Load indicator
- Remote control with display
- 7 x 1.5 V AA batteries
- Carrying case
- Test certificate
- Without shackles and hooks
- PC cable
- User software



Load indicator

Measuring range 0 - 100 t

The Tigrip® load indicator is a mechanical measuring instrument with electronic display. On account of its flexibility the Tigrip® load indicator has universal applications. Whether used as a conventional crane weigher or to measure forces, it is the economical choice for various applications. It can be used in conjunction with shackles and hooks.
The load indicator is provided with liquid crystal display (LCD), which can tare as well as show either the gross or the net load. It also indicates overload at 110 % of the rated capacity and the status of the battery).

- TZL with digital display

Features

- High accuracy
- Lightweight design
- Easy-to-read display
- Easy to use
- Robust design
- Retains the peak value to memory.
- The battery capacity provides for around 200 operating hours.
- Automatic setting to zero when load indicator is switched on.
- Use of rechargeable batteries possible (external battery charger*).
- Display of maximum weight (gross/net).
- Display of measuring units on the load indicator.
- Measuring units kg, t, lbs, to, kN.
- Automatic stand-by for a prolonged battery lifetime.
- Simple change of batteries
- Warning if batteries are low.
- Overload warning

Scope of delivery

- Load indicator
- 4 x 1.5 V AA batteries
- Carrying case
- Test certificate
- Without shackles and hooks

* not part of the delivery package.

Technical data TZL and TZR

Model	TZL 2,5 –	TZL 5,0 –	TZL 10,0 TZR 10,0	TZL 20,0 TZR 20,0	– TZR 35,0	– TZR 50,0	– TZR 100,0
Art.-No. TZL	N53808324	N53808325	N53808326	N53808327	–	–	–
Art.-No. TZL shackles	CM851A	N42000064	N42000069	N42000069	–	–	–
Art.-No. TZL hooks	N53818351	N53818352	N53818322	N53818324	–	–	–
Art.-No. TZR	–	–	N53808333	N53808335	N53808336	N53808337	N53808338
Art.-No. TZR shackles	–	–	N42000069	N42000069	N42000071	N42000072	N42000075
Art.-No. TZR hooks	–	–	N53818322	N53818324	N53818326	N53818328	N53818330
Measuring range, t	0 - 2.5	0 - 5.0	0 - 10.0	0 - 20.0	0 - 35.0	0 - 50.0	0 - 100.0
Nominal load, t	2.5	5.0	10.0	20.0	35.0	50.0	100.0
Limit load, t	2.75	5.5	11	22	38.5	55	110
Breaking load, t	≥ 10	≥ 20	≥ 40	≥ 80	≥ 140	≥ 200	≥ 400
Weight without lifting accessories, kg	1.7	2.1	3.9	6.8	9.4	14.4	39.3
Accuracy of the end value	0.2 %	0.2 %	0.2 %	0.2 %	0.2 %	0.2 %	0.2 %
Resolution step, kg (partition)	1	1	10	10	10	10	50
Operation time, approx., h [1]	200						
Temperature range (operation)	-10 °C up to + 50 °C						
Temperature range (storage)	- 20 °C up to + 70 °C						
Protection	IP 54						
Display (LCD 20.5 mm high)	4 ½ digits						
Tare range	100 % of rated capacity						
Overload warning	Overload warning at 110 % of the rated capacity						

[1] with 4 x 1.5 V AA batteries

Dimensions TZL and TZR

Model	TZL 2,5 –	TZL 5,0 –	TZL 10,0 TZR 10,0	TZL 20,0 TZR 20,0	– TZR 35,0	– TZR 50,0	– TZR 100,0
A, mm	233	250	325	378	405	450	640
B, mm	118	118	118	141	156	180	260
C, mm	22	27	48	55	66	76	100
D, mm	173	180	213	233	245	264	380
E, mm	19	215	22	32	47	55	80
G, mm	25	305	47	57	67	77	99
H, mm	422	451	644	742	842	942	113
J, mm	604	610	690	780	1000	1170	–
K, mm	34	50	105	92	130	140	300
L, mm	38	44	95	95	114	132	238
M, mm	16	19	35	35	44	51	89
N, mm	25	32	50	70	110	115	–
O, mm	23	37	63	80	123	132	–
P, mm	17	28	44	57	90	97	–
Q, mm	309	315	535	562	665	730	1240

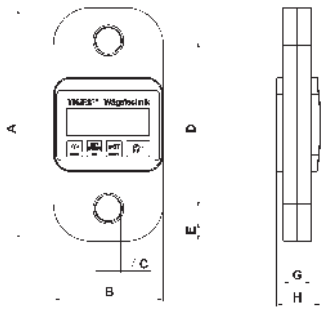

Load indicator TZL/TZR 2.5 up to 100.0 t

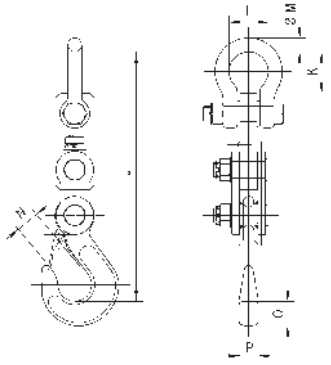

Load indicator TZL/TZR with hook

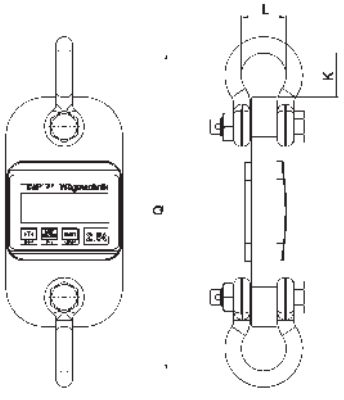

Load indicator TZL/TZR with shackle