EY15L 1150X550

EASY TO USE, POWERFUL, LI-ION BATTERY



EASE OF USE

It's very easy to drive thanks to the intuitive controls at your fingertips and compact dimensions:

- Easy to operate with ergonomic handle and all the controls at your fingertips.
- Convenient to operate in narrow spaces such as vans, on tail lifts, or inside elevators.
- When the battery is at low level, it can be moved away manually.
- Slope anti-sliding design to easy parking on slopes, preventing accidental backing of the machine.
- Easy replacement battery and easy to charge.
- Battery status visible from display.



MANOEUVRABILITY

The overall width of the machine matches with the fork width.

This makes the unit as compact as possible and, together with the reduced turning radius, enables to work in narrow spaces.



ROBUSTNESS

Robust frame designed to guarantee maximum durability and resistance to torsion and loads.

Fork tips shaped for an easier entrance/exit on the closed side of the pallet.



www.pramac.com

SAFETY

Emergency push button, belly button and electrobrake are the standard safety features of the machine.
The cover for driving wheel protects the operator's feet during work and secures the truck's components from collision with objects.



PLUG-IN & OUT LI-ION BATTERY

Maintenance free lithium battery with a long service life.

The plug-in&out system enables an easy battery replacement in just few seconds, without using any cables.

The machine can also be equipped with a second extra battery, allowing continuous and non-stop work.

External charger 48V - 2A.



EASY MAINTENANCE

Simple construction with a design that allows a really easy disassembly and assembly, reducing machine downtime and operating costs.

Error code display to facilitate quick problem resolution.

Maintenance-free Li-Ion battery.



www.pramac.com

Description				
	Lift			Electric
1.3	Drive			Electric
1.4	Operator type			Pedestrian
1.5	Load capacity	Q	kg	1500
1.6	Load centre distance	c	mm	600
1.8	Load axle to end forks	x	mm	952
1.9	Wheel base	y	mm	1197

Weights				
2.1	Service weight (battery included)		kg	116.5
2.2	Axle load, laden rear		kg	1136.5
2.2	Axle load, laden front		kg	480
2.3	Axle load, unladen front		kg	84
2.3	Axle load, unladen rear		kg	30

Tyres/Chassis				
3.1	Tyres: front wheels			POLY.C
3.1	Tyres: rear wheels			POLY
3.2	Tyre size: Steering wheels - Width		mm	55
3.2	Tyre size: Steering wheels - Diameter		mm	140
3.3	Tyre size: Load rollers - Diameter		mm	80
3.3	Tyre size: Load rollers - Width		mm	70
3.5	Tyre size: rear wheels - Q.ty (X=driven)		nr	4
3.5	Tyre size: front wheels - Q.ty (X=driven)		nr	1x
3.7	Tread, rear	b11	mm	390

Dimensions				
4.4	Lift height	h3	mm	115
4.9	Height of tiller in drive position max	h14	mm	1220
4.9	Height of tiller in drive position min	h14	mm	740
4.15	Height, lowered	h13	mm	82
4.19	Overall lenght	l1	mm	1552
4.20	Lenght to face of forks	l2	mm	402
4.21	Overall width (front/rear)	b1/ b2	mm	550
4.22	Fork dimensions - Thickness	s	mm	58
4.22	Fork dimensions - Width	e	mm	160
4.22	Fork dimensions - Lenght	l	mm	1150
4.25	Forks width	b5	mm	550
4.32	Ground clearance, centre of wheelbase	m2	mm	22
4.34	Aisle width	Ast	mm	2024
4.35	Turning radius	Wa	mm	1353

www.pramac.com

Performance data		
5.1 Travel speed laden	km/h	4.0
5.1 Travel speed unladen	km/h	4.5
5.2 Lifting speed laden	m/s	0.018
5.2 Lifting speed unladen	m/s	0.023
5.3 Lowering speed laden	m/s	0.056
5.3 Lowering speed unladen	m/s	0.046
5.8 Max gradeability laden	%	6
5.8 Max gradeability unladen	%	20
5.10 Service brake		Electric

Electric motors		
6.1 Drive motor power	kW	0.75
6.2 Lift motor power	kW	0.8
6.4 Battery voltage	V	48
6.4 Battery capacity	Ah	10
6.5 Battery weight	kg	4.7
8.4 Sound level at driver's ear	dB(A)	<70

www.pramac.com

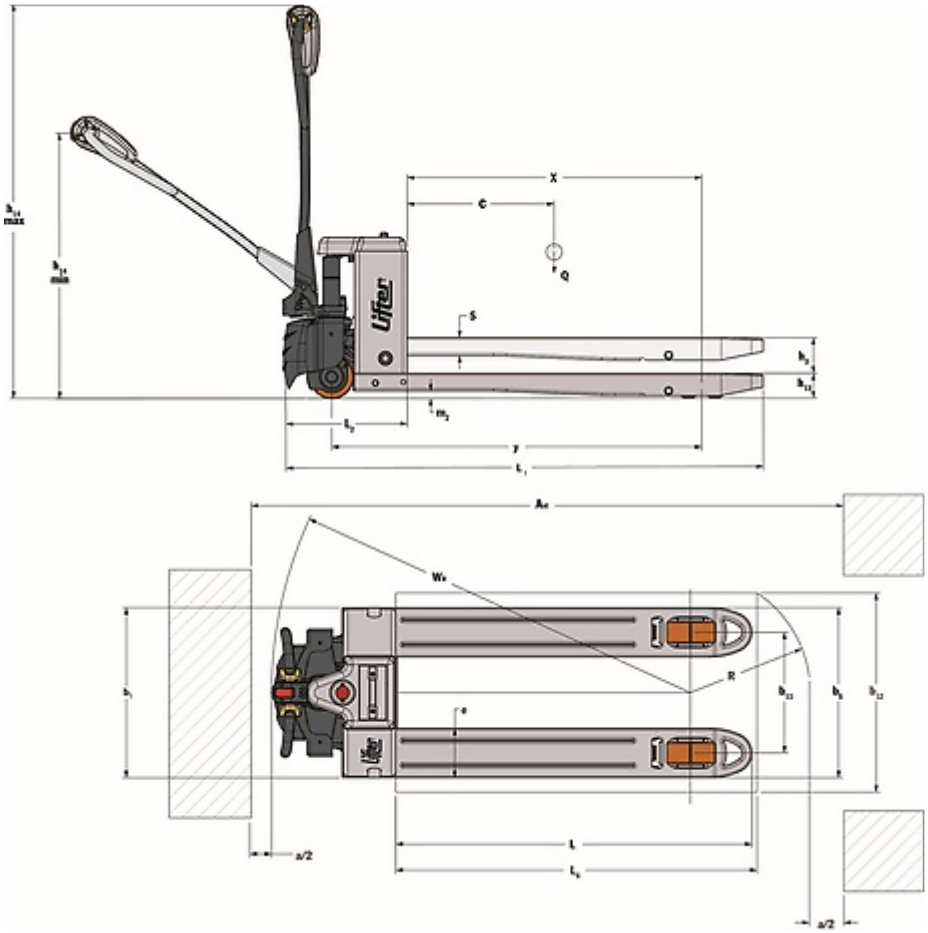

www.pramac.com

The information is aligned with the Data file at the time of download. Printed on 04/03/2024 (ID 20795)

©2024 | PR Industrial S.r.L unipersonale – Loc. Il Piano – 53031 Casole d'Elsa (SI) – ITALY. Company subject to the management and coordination of Generac Power Systems Inc.| All rights reserved | Image shown may not reflect actual package. Specifications subject to change without notice