USER GUIDE

# ACCESS CAGE

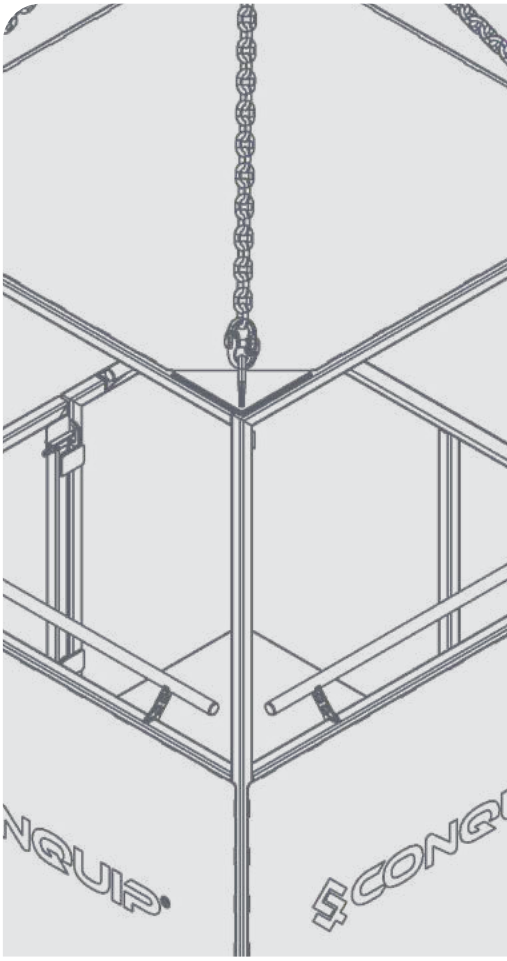

# DISCLAIMER

Do not attempt to handle or operate this equipment before you have received sufficient training. Before use, operatives must have carried out all checks featured on the Visual Inspection Sheet on page 17. It is imperative that you have read the General Safety Instructions on page 18 and sufficiently familiarised yourself with the Operational Procedures in this document.

Note that this item is compliant only to the standards specified in this User Guide and it is therefore the duty of the responsible person(s) to review and ensure compliance.



# CONTENTS

**PRODUCT INFORMATION**

INTRODUCTION 04
SPECIFICATION 05

**OPERATIONAL PROCEDURES**

IMPORTANT USAGE NOTES 12
LIFTING WITH A CRANE 12
LIFTING WITH A FORKLIFT 13
HARNESS ATTACHMENT POINTS 13
USING THE EVACUATION POINT 13

**MAINTENANCE & INSPECTION**

MAINTENANCE REGIME 16
VISUAL INSPECTION SHEET 17

**GENERAL SAFETY INSTRUCTIONS**

SAFETY INSTRUCTIONS 18
GENERAL NOTES 19

**LEGAL**

TERMS AND CONDITIONS 20
EC DESIGN CONFORMITY 24
STANDARDS AND REGULATIONS APPLICABLE 25

# INTRODUCTION

## OVERVIEW

Conquip Access Cages are designed for transporting personnel around site.

Ideal for large project sites or those with restricted access, our range covers varying requirements, including reaching confined spaces or providing access to tunnels and shafts.

Manufactured to the highest standards with half-height solid sides that enhance the safety of the occupants, while providing them and the crane operator with greater visibility.

Designated internal harness attachment points, one per occupant, and handrails help stabilise personnel during lifts and a safety locking catch keeps the door securely closed.

## KEY BENEFITS

### VERSATILE LIFTING SOLUTION
Wide range of sizes from 1 to 12 person capacities to suit projects of any size and type.

### MAXIMUM SECURITY AND STABLILTY
Each cage in the range features one designated harness point per occupant and robust handrails on every side.

### PERSONNEL SAFETY
A recessed base prevents foot traps and potential crush risks and the door is fitted with a safety locking catch to keep it securely closed during lifts. All cages are fitted with a square hollow section (SHS) for use as an emergency descent point (EDP) in an evacuation.

### CONFIDENCE WITH EVERY LIFT
Suitably-rated, dedicated four-leg chain sling provided as standard with every cage.

### FULLY COMPLIANT
Our Access Cage range is compliant with BS EN 14502-1:2010 and BS 8681:2024 standards, plus LOLER and PUWER regulations.

### DURABLE DESIGN, RIGOROUSLY TESTED
Manufactured from high-quality steel to pass a range of strength, impact, weight and load tests.

### SUPERIOR VISIBILITY
Manufactured with half-height solid steel sides for maximum safety, whilst providing the crane operator and personnel in the cage with a clear line of sight.





# SPECIFICATION

## THE RANGE

| CODE | TYPE | WEIGHT (kg) | WLL* (kg) |
|---|---|---|---|
| CA126-00120 | 1-Person Access Cage | 220 | 120 |
| CA120AB-00240 | 2-Person Access Cage | 300 | 240 |
| CA123-00480 | 4-Person Access Cage | 460 | 480 |
| CA123-00720 | 6-Person Access Cage | 620 | 720 |
| CA123AF-01440 | 12-Person Access Cage | 950 | 1440 |

*Working Load Limit

# SPECIFICATION

| ITEM | PRODUCT CODE |
|---|---|
| 1-Person Access Cage | CA126-00120 |

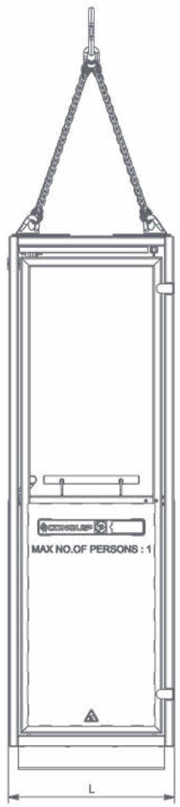


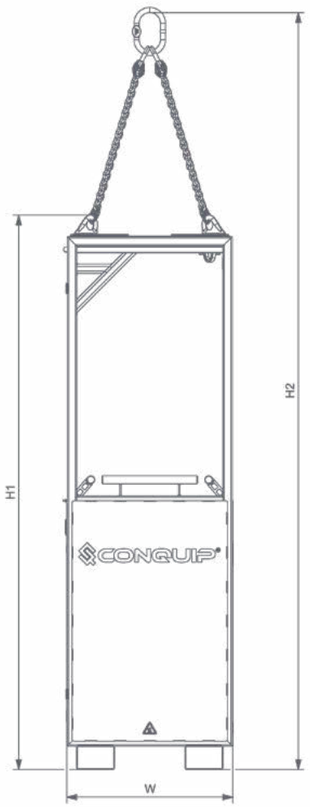


| L (mm) | W (mm) | H1 (mm) | H2 (mm) |
|---|---|---|---|
| 705 | 705 | 2350 | 3210 |





# SPECIFICATION

| ITEM | PRODUCT CODE |
|---|---|
| 2-Person Access Cage | CA120AB-00240 |

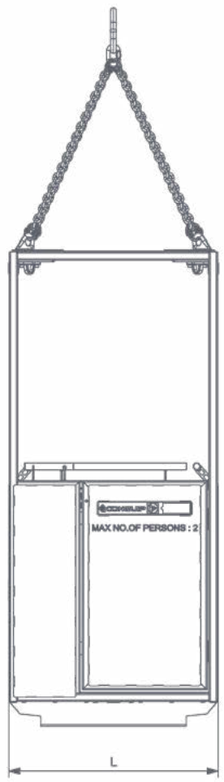


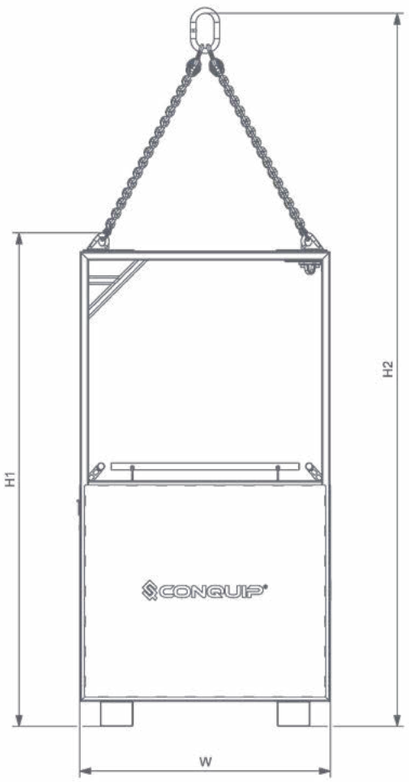


| L (mm) | W (mm) | H1 (mm) | H2 (mm) |
|---|---|---|---|
| 1005 | 1205 | 2370 | 3425 |

# SPECIFICATION

| ITEM | PRODUCT CODE |
|---|---|
| 4-Person Access Cage | CA123-00480 |

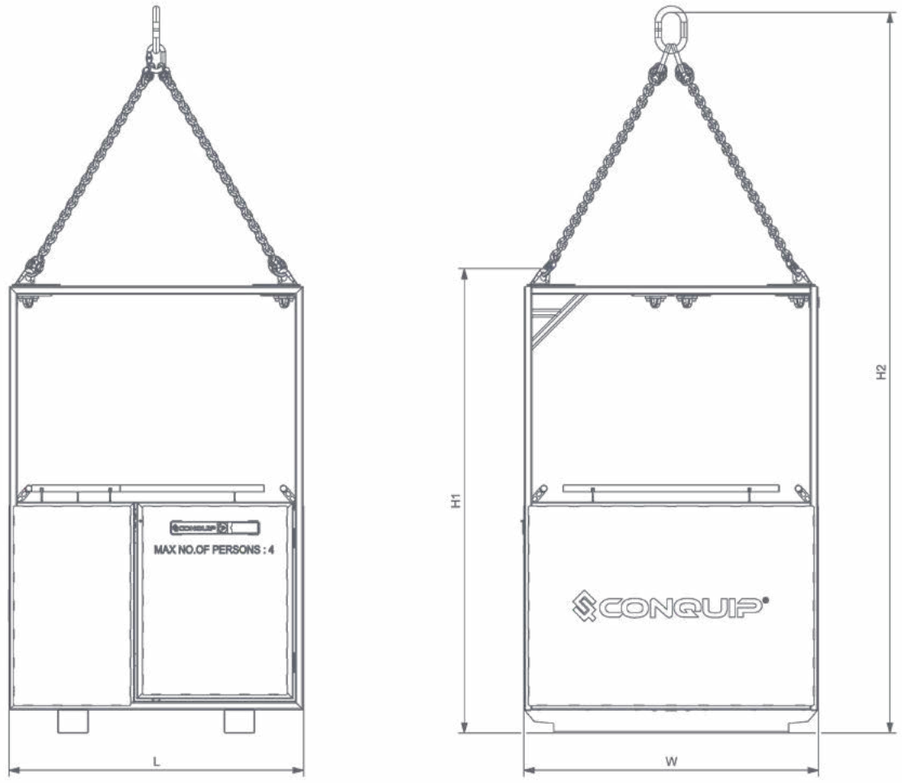


| L (mm) | W (mm) | H1 (mm) | H2 (mm) |
|---|---|---|---|
| 1505 | 1505 | 2370 | 3680 |





# SPECIFICATION

| ITEM | PRODUCT CODE |
|---|---|
| 6-Person Access Cage | CA123-00720 |

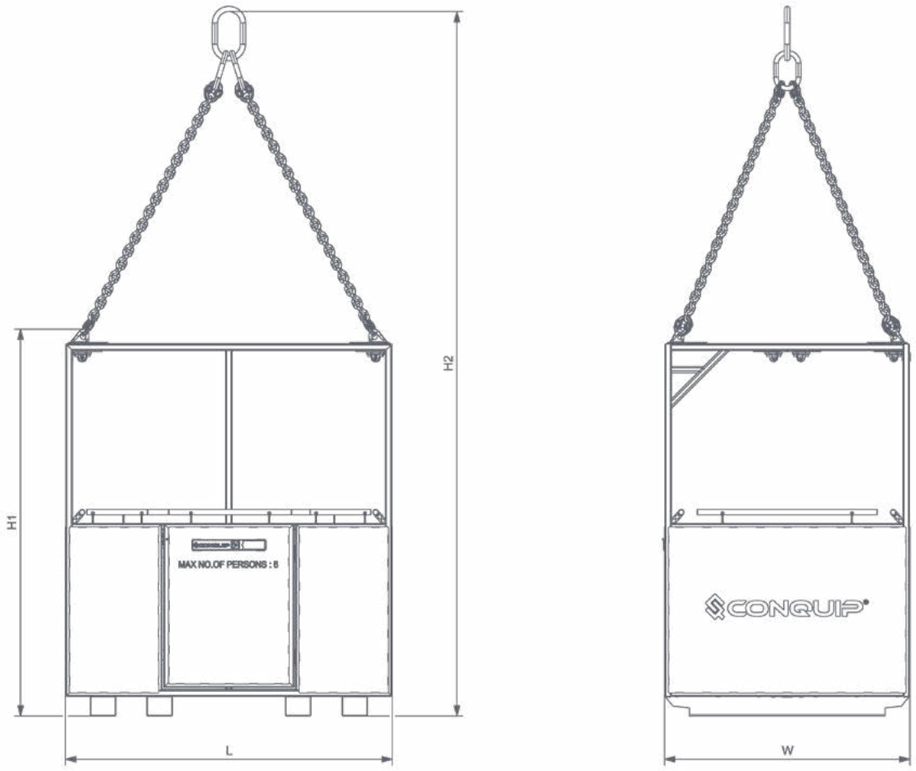


| L (mm) | W (mm) | H1 (mm) | H2 (mm) |
|---|---|---|---|
| 2005 | 1505 | 2370 | 4320 |

# SPECIFICATION

| ITEM | PRODUCT CODE |
|---|---|
| 12-Person Access Cage | CA123AF-01440 |

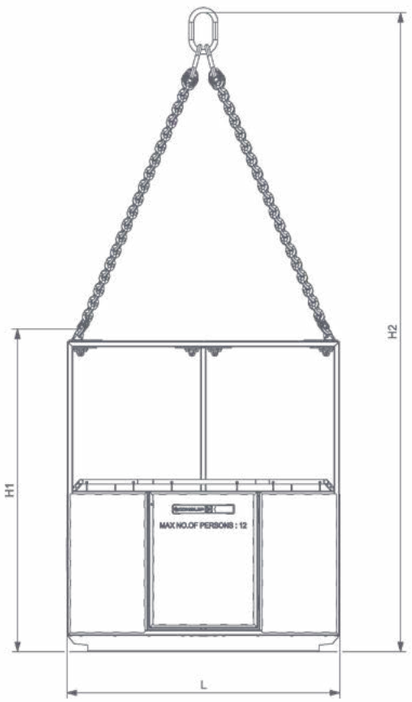


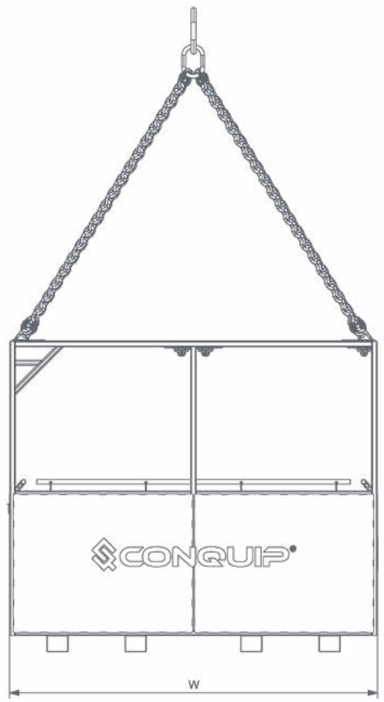


| L (mm) | W (mm) | H1 (mm) | H2 (mm) |
|---|---|---|---|
| 2005 | 2705 | 2370 | 4695 |

# OPERATIONAL PROCEDURES

## IMPORTANT USAGE NOTES

- Each cage has been designed for a certain number of people – refer to the specification details.
- Do not overload the Access Cage by volume or weight.
- Do not lean from the cage.
- Do not stand on the guardrails or place materials on them.
- Do not use boxes, steps or similar, to gain extra height.
- Make sure all tools are tethered to relevant personnel or handrails.
- Do not use in high winds, storms, ice, snow, fog, sleet or other adverse weather conditions.
- Do not operate with other machinery simultaneously.
- Ensure any ground operatives are clear of the immediate area during lifting operations to prevent 'hands-on' positioning as the cage is raised or lowered.
- Always comply with the harness manufacturer's usage instructions.

## LIFTING WITH A CRANE

01. Attach the hook of the lifting apparatus to the Access Cage's certifed four-leg lifting chain. Always ensure that the hook's gate is correctly closed.
02. Personnel should enter the cage only when it is fully lowered and placed on firm, level ground.
03. Open the entry gate, enter the cage, then close the self-latching gate. Do not allow more people to enter the cage than it has been designed for.
04. When wearing a harness and restraint lanyard, attach the lanyard from the harness to the anchorage point.
05. Carefully raise the Access Cage just off the ground to check for balance and security.
06. Once the supervisor is happy that the cage is secure and not overloaded, carefully transport the cage to its required destination, taking care not to jolt the load.
07. When in position, lower the Access Cage onto firm, level ground.
08. Exit and close the gate behind you. Do not exit the Access Cage unless it is stationary and stable.
09. When you have finished with the cage, transport it to its storage location with a forklift, telehandler or crane. If attached to a crane, lower the lifting hook and disconnect the cage's four-leg lifting chain from the crane hook.
10. Do not remove the lifting chain from the cage.





## HARNESS ATTACHMENT POINTS

1 PERSON

2 PERSON

4 PERSON

6 PERSON

12 PERSON

## USING THE EVACUATION POINT

### DISCLAIMER

The Lead Appointed Person (Lead AP) shall be solely responsible for ensuring that any emergency descent procedure implemented in connection with the Access Cage is fully compliant with all relevant health and safety legislation, the applicable British and international standards and specific site risk assessment and method statements governing lifting operations.

The Lead AP must ensure that all procedures, equipment selection and personnel competencies used during an emergency descent meet or exceed the statutory and organisational requirements in force at the time of use, and no deviation from such requirements are permitted.

Personnel should be briefed and trained under the Lead AP's authority to confirm their understanding of these obligations prior to engaging in any lifting activity.

This procedure is provided solely as a general technical guide and shall not be considered a substitute for site-specific or regulatory-mandated emergency descent procedures. It should only be applied in scenarios where a more detailed, robust and formally approved procedure is not available. In all cases, the Lead AP must prioritise compliance with the governing legal, safety and engineering controls applicable to the specific site and equipment.

### EMERGENCY DESCENT POINT (EDP)

### PROCEDURE

In the event that normal recovery of the Access Cage cannot be achieved, the authorised occupant shall immediately initiate the emergency communication procedure by notifying the crane operator, the banksman/signaller and designated ground rescue personnel via the prescribed communication system, and communication shall be maintained continuously for the duration of the operation.

All occupants shall remain secured to the designated harness points/fall arrest anchor points within the cage until a competent person confirms that emergency descent is required and that the descent path is free from obstructions.

The user shall identify and only utilise the designated Emergency Descent Point (EDP) as the structurally verified and load-rated Square Hollow Section (SHS) provided for this specific purpose; under no circumstances must the user attach a descent device to any other cage component, including but not limited to handrails, mesh panels, gates, floor sections, or lifting lugs.

The user shall attach an approved and serviceable personal descent device to the SHS EDP in accordance with the manufacturer's instructions, ensuring that any connector, whether karabiner, sling, or other certified linking component, is correctly oriented, fully closed and positively locked. The user should conduct a visual and tactile check to confirm proper seating of the device prior to use.

Once the descent device is secured to the SHS EDP, the user shall connect the device's user line to the appropriate attachment point of their personal fall-protection harness and must only disconnect from the in-cage harness point/fall-arrest anchor when authorised and when it has been assessed as safe to do so. The user shall initiate and control the descent strictly in accordance with the device manufacturer's operational procedures and must maintain a stable posture and continuous communication with ground personnel throughout.

Upon reaching the ground, the user shall detach their personal fall-prevention harness from the device user line, move clear of the landing zone and notify the ground controller that descent has been completed. Following any emergency descent deployment, the cage, the SHS EDP and all associated lifting and personal protective equipment shall be removed from service pending inspection and certification by a competent lifting-equipment engineer. The event must be recorded in the site's statutory documentation in accordance with organisational and regulatory requirements.

# MAINTENANCE & INSPECTION

## MAINTENANCE REGIME

- It is mandatory that the equipment is thoroughly examined regularly, by a qualified engineer, to ensure compliance with relevant regulations. Conquip recommend carrying out a thorough examination every six months.
- This equipment may incorporate various loose and detachable items including, but not limited to pins, bolt assemblies and adaption plates. Refer to the separate requirements for the safe use of those items.
- When not being used, store the unit in a clean, upright condition and in a safe place where it will be protected from thieves and unauthorised users.
- This equipment must be inspected by the responsible person before each use and then regularly, as determined by your risk assessment or working practice. If you have any concerns about the equipment's condition or suitability, do not use it.

## SAFETY DECALS

These are the safety decals featured on the equipment. When carrying out the visual inspection of the equipment, please ensure all decals are present before checking this item off the list.

## VISUAL INSPECTION CHECKLIST

| INSPECTION ITEMS | RESULTS | | COMMENTS |
|---|---|---|---|
| | PASS | FAIL | |
| Serial Number | | | CQ..... |
| Product Code | | | |
| Working Load Limit (Kg) | | | |
| Conforms to user guide specification | | | |
| Check master link for distortion, nicks, gouges | | | |
| Check chains for rust pitting, nicks, gouges | | | |
| Check component connectors are fitted correctly | | | |
| Check lift points for bends or distortion | | | |
| Check harness points for security, distortion and damage | | | |
| Check square hollow section (SHS) used as the Emergency Descent Point (EDP) for bends or distortion. | | | |
| Check handrails for security, distortion and damage | | | |
| Check the operation of the door | | | |
| Check the floor is clear of obstacles or obstruction | | | |
| Carry out a general visual inspection of the body, checking for distortion and damage | | | |

| SIGNATURE | | | |
|---|---|---|---|
| Name | Position | Qualification | Signature & Date |
| | | | |

# GENERAL SAFETY INSTRUCTIONS

The equipment should be properly operated and maintained to keep it in a safe, efficient operating condition. Be sure that all fixings and components are free of mud or other matter that might cause issues hazardous to the operator, serviceman, or other personnel or equipment. Report all malfunctions to those responsible for maintenance, and do not operate the equipment until corrected. Normal service or maintenance performed as required can prevent unexpected and unnecessary downtime.

This operations manual describes general inspections, servicing and operation with the normal safety precautions required for normal servicing and operating conditions. It is not a guide, however, for abnormal conditions or situations, and therefore, servicemen and operators must be safety conscious and alert to recognise potential servicing or operating safety hazards at all times, and take necessary precautions to assure safe servicing and operation of the machine.

**M002**
Refer to instructions manual

**M004**
Wear eye protection

**M008**
Wear safety footwear

**M009**
Wear protective gloves

**M010**
Wear protective clothing

**M014**
Wear head protection

**M015**
Wear high-visibility clothing

**M018**
Wear a safety harness





## GENERAL NOTES

- Read this operations manual and learn the operating characteristics and limitations of the equipment. Know what operating clearances the machine requires.
- Read and understand all the safety signs prior to operation.
- If the safety signs are obstructed by dirt or debris, clean them using mild soap and water prior to operation.
- If the safety signs are damaged or illegible, replace them immediately, prior to operation.
- Be aware of operating hazards that weather changes can create on the job. Know proper procedures to follow when a severe rain or electrical storm strikes.
- Never attempt to operate or work on machinery when not feeling physically fit.
- Never wear loose clothing, rings, watches, heavy gloves etc., that might catch and result in injury.
- Know what safety equipment is required and use it. Such equipment may be: hard hat, safety glasses, reflector type vests, protective gloves and safety footwear.

# TERMS & CONDITIONS

## CONQUIP ENGINEERING GROUP STANDARD PRODUCT WARRANTY

### 01. COMMENCEMENT

1.1 This Warranty shall commence on the Commencement Date and shall continue until the earlier of:

(a) the Expiry Date; or

(b) the date on which it may be voided in accordance with clause 4.1(b)

when it shall terminate automatically without notice.

### 02. DUTY OF GOOD FAITH

2.1 The Purchaser shall in the exercise of its rights under this Warranty and in the compliance with its obligations under this Warranty be subject to and shall in all respects owe and comply with a duty of good faith to the Warrantor.

### 03. NATURE AND EXTENT OF COVER

3.1 Subject to clause 3.2 the Warrantor agrees and undertakes to the Purchaser that it shall be liable to the Purchaser under and in accordance with the terms of this Warranty in the event that:

(a) prior to the Expiry Date the Purchaser shall notify a Warranty Claim to the Warrantor; and

(b) the Equipment or any relevant part of the Equipment shall have become unusable as the result of defective material or defective workmanship prior to the Expiry Date.

3.2 The Warrantor's obligation under clause 3.1 shall be expressly subject to the provisions of clauses 4, 5 and 6 and conditional upon the Purchaser's compliance in full with the provisions of clause 7.

### 04. RESTRICTIONS

4.1 The following restrictions apply to this Warranty:

(a) This Warranty is personal to the Purchaser and neither the legal benefit nor legal burden of this warranty may be assigned or novated or otherwise transferred by the Purchaser to any other party. Any purported assignment, novation or transfer shall not be binding upon the Warrantor.

(b) This Warranty shall be void in the event that the Purchaser:





(i) cannot provide authentic and original documentary evidence that the Purchaser has during the period between the Commencement Date and the Expiry Date complied with the Maintenance and Servicing Requirements; and/or

(ii) has, during the period between the Commencement Date and the Expiry Date, exceeded the Purchaser's Usage Cycle Parameters; and/or

(iii) has, during the period between the Commencement Date and the Expiry Date, exceeded the Purchaser's Use Parameters; and/or

(iv) has carried out, or procured the carrying out by any third party of, any repair to the Equipment or any part of the Equipment which is not an Authorised Repair; and/or

(v) has operated the Equipment after having replaced any part of the Equipment with a part which has not been supplied and fitted by the Warrantor; and/or

(vi) has modified the Equipment in any way prior to use.

### 05. EXCLUSIONS

5.1 The following are excluded from the scope of this Warranty:

(a) Loss of and/ or damage to the Equipment or any part of it resulting from any collision between the Equipment and any other fixed or stationary or mobile object whatsoever, irrespective of whether that collision was or was not caused by the Purchaser; and/or

(b) Loss of and/or damage to any personal property and/or possessions or other equipment not forming part of the Equipment but which is present in or about the Equipment; and/or

(c) loss and/or damage which is covered by any other insurance policy taken out and maintained by the Purchaser or in respect of which the Purchaser has a contractual obligation to do so; and/or

(d) loss and/or damage to the equipment which is consistent with the use by the Purchaser of the Equipment:

(i) in compliance with the Maintenance and Servicing Requirements; and

(ii) in compliance with the Usage Cycle Parameters; and

(iii) in compliance with the Use Parameters; and

(iv) having only carried out Authorised Repairs to the Equipment; and

(v) having all and any replacement parts fitted by the Warrantor; and

(vi) in unmodified form.

## 06. LIMITATION OF LIABILITY

6.1 The Warrantor's liability to the Purchaser shall be limited as follows:

(a) The Warrantor shall not in any circumstances be liable to the Purchaser for indirect and/or consequential and/or economic loss suffered and/or incurred as the case may be by the Purchaser; and

(b) The Warrantor shall only be liable to the Purchaser for the reasonable and proper costs reasonably and properly incurred by the Purchaser directly in connection with the repair and/or replacement (at the Warrantor's absolute discretion) of the Equipment or any part of the Equipment; and

(c) The Warrantor's liability to the Purchaser shall notwithstanding any other provision of this Warranty, not in any circumstances exceed the Purchase Price of the Equipment.

## 07. WARRANTY CLAIMS

7.1 The Purchaser shall in respect of any claim against the Warrantor under this Warranty and within 24 hours of the occurrence of the subject matter of the Warranty Claim:

(a) Complete in full and submit to the Warrantor a Warranty Claim in the form annexed to Schedule 4;

(b) Provide date stamped or date identifiable photographs evidencing the claim; and

(c) Make the Equipment or the relevant part of the Equipment available to the Warrantor for inspection within 48 hours of notification of the relevant Warranty Claim.

## 08. ENTIRE AGREEMENT

8.1 This Warranty constitutes the entire agreement between the parties and supersedes and extinguishes all previous promises, assurances, warranties, representations and understandings between them, whether written or oral, relating to its subject matter.

8.2 Each party agrees that it shall have no remedies in respect of any statement, representation, assurance or warranty (whether made innocently or negligently) that is not set out in this Warranty. Each party agrees that it shall have no claim for innocent or negligent misrepresentation or negligent misstatement based on any statement in this Warranty.

No variation of this Warranty shall be effective unless it is in writing and signed by the parties (or their authorised representatives).

## 09. WAIVER

No failure or delay by a party to exercise any right or remedy provided under this Warranty or by law shall constitute a waiver of that or any other right or remedy, nor shall it prevent or restrict the further exercise of that or any other right or remedy. No single or partial exercise of such right or remedy shall prevent or restrict the further exercise of that or any other right or remedy.





## 10. SEVERANCE

10.1 If any provision or part-provision of this Warranty is or becomes invalid, illegal or unenforceable, it shall be deemed deleted, but that shall not affect the validity and enforceability of the rest of this Warranty.

10.2 If any provision or part-provision of this Warranty is deemed deleted under clause 10.1 the parties shall negotiate in good faith to agree a replacement provision that, to the greatest extent possible, achieves the intended commercial result of the original provision.

## 11. THIRD PARTY RIGHTS

11.1 This Warranty does not give rise to any rights under the Contracts (Rights of Third Parties) Act 1999 to enforce any term of this Warranty.

## 12. GOVERNING LAW

12.1 This Warranty and any dispute or claim (including non-contractual disputes or claims) arising out of or in connection with it or its subject matter or formation shall be governed by and construed in accordance with the law of England and Wales.

## 13. JURISDICTION

13.1 Each party irrevocably agrees that the courts of England and Wales shall have exclusive jurisdiction to settle any dispute or claim (including non-contractual disputes or claims) arising out of or in connection with this Warranty or its subject matter or formation.

# DESIGN CONFORMITY (EC & UK)

(01) This certificate meets the requirements of the Machinery Directive 2023/42/EC of the European Parliament and Council.

(02) This certificate meets the requirements of the Supply of Machinery (Safety) Regulations 2008.

## DETAILS

| NAME & ADDRESS OF MANUFACTURER: |
|---|
| Conquip Engineering Group Ltd, Unit 4, Waterbrook Estate, Alton, Hampshire. GU34 2UD |

| NAME & ADDRESS OF PERSON TO COMPILE TECHNICAL FILE: |
|---|
| Name: Daniel Critchley<br>Address: Conquip Engineering Group, Unit 4, Waterbrook Estate, Alton, Hampshire. GU34 2UD |

| NAME & ADDRESS OF AUTHORISED REPRESENTATIVE IF ONE HAS BEEN MANDATED BY THE MANUFACTURER: |
|---|
| N/A |

| NAME, ADDRESS, AND IDENTIFICATION NUMBER OF THE NOTIFIED BODY (01) OR APPROVED BODY (02), WHERE APPLICABLE: |
|---|
| N/A |

## EQUIPMENT DESCRIPTION

| PRODUCT CODES | GENERAL DESCRIPTION / DESIGNATION | WORKING LOAD LIMIT |
|---|---|---|
| CA126-00120 | 1 Person Access Cage | 120kg |
| CA120AB-00240 | 2 Person Access Cage | 240kg |
| CA123-00480 | 4 Person Access Cage | 480kg |
| CA123-00720 | 6 Person Access Cage | 720kg |
| CA123AF-01440 | 12 Person Access Cage | 1440kg |





## HARMONISED STANDARDS & REGULATIONS

| ITEM | CODE | DESCRIPTION |
|---|---|---|
| EC DIRECTIVE/ REGULATION | 2023/42/EC | Directive 2023/42/EC- new machinery directive |
| HARMONISED STANDARDS | BS EN ISO 12100:2010 | Safety of machinery General principles for design Risk assessment and risk reduction |
| | BS EN 14502-1:2010 | Cranes. Equipment for the lifting of persons. Suspended baskets |
| | BS 8681:2024 | Personal Fall Protection Equipment – Anchor Systems |
| OTHER REGULATIONS | LOLER 1998 | Lifting Operations and Lifting Equipment Regulations 1998 (LOLER) |
| | PUWER 1998 | Provision and Use of Work Equipment Regulations 1998 (PUWER) |

## DECLARATION

| PLACE OF DECLARATION: |
|---|
| Alton |

| DATE OF DECLARATION: |
|---|
| March 2026 |

I declare that the above equipment meets the Essential Health and Safety requirements of the

(01) Machinery Directive 2023/42/EC of the European Parliament and Council.

(02) Supply of Machinery (Safety) Regulations 2008 and Section 6 of the Health and Safety at Work Etc. Act 1974.

| NAME: | POSITION: | SIGNATURE: |
|---|---|---|
| Daniel Critchley | Chief Executive Officer | |

support@cqegroup.com | +44 (0) 333 300 3470 | www.cqegroup.com

NOTES

TALKING TO US IS EASY

# WE'RE HERE TO HELP

Call us on 0333 300 3470
Email us at sales@cqegroup.com
www.cqegroup.com

Copyright © 2026 Conquip Engineering Group. All Rights Reserved.
Access Cage - Issue 08