USER GUIDE

FIXED FLUSH CANTIDECK

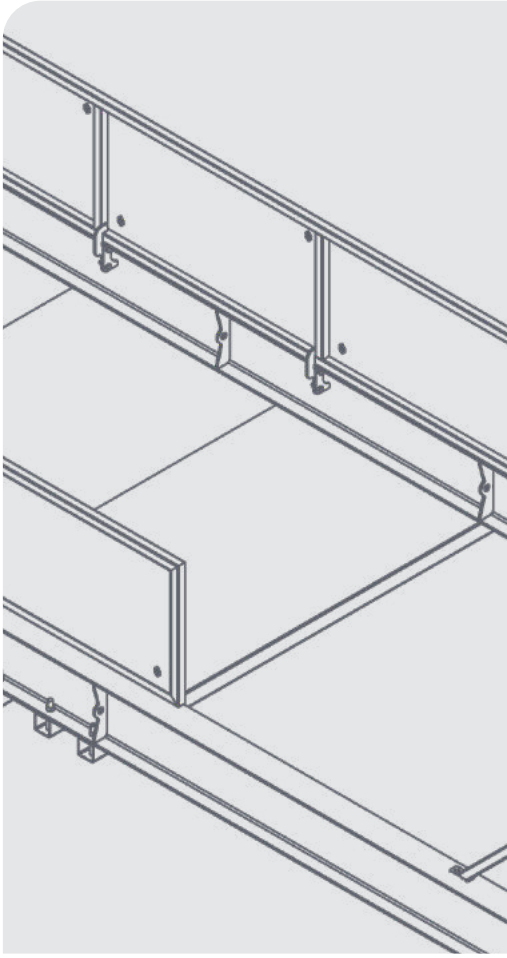

DISCLAIMER

Do not attempt to handle or operate this equipment before you have received sufficient training. Before use, operatives must have carried out all checks featured on the Visual Inspection Sheet on page 17. It is imperative that you have read the General Safety Instructions on page 18 and sufficiently familiarised yourself with the Operational Procedures in this document.

Note that this item is compliant only to the standards specified in this User Guide and it is therefore the duty of the responsible person(s) to review and ensure compliance.

CONTENTS

PRODUCT INFORMATION

INTRODUCTION 04

SPECIFICATION 06

OPERATIONAL PROCEDURES

IMPORTANT USAGE NOTES 08

IN ADVANCE OF THE DAY 08

ON THE DAY 09

REMOVAL INSTRUCTIONS 14

MAINTENANCE & INSPECTION

MAINTENANCE REGIME 16

VISUAL INSPECTION SHEET 17

GENERAL SAFETY INSTRUCTIONS

SAFETY INSTRUCTIONS 18

GENERAL NOTES 19

LEGAL

TERMS AND CONDITIONS 20

EC DESIGN CONFORMITY 24

STANDARDS AND REGULATIONS APPLICABLE 25

INTRODUCTION

OVERVIEW

The Conquip CantiDeck is a crane loading platform used for moving equipment and materials efficiently in and out of structures during construction.

The Fixed Flush CantiDeck is ideal for situations where reduced headroom places working height at a premium, and where maximum clearance is essential. The deck of the platform is suspended from the base of the main load-bearing beam, giving a true level or 'flush' transition from the floor of the structure to the loading area of the deck.

The Fixed Flush version is suitable for a range of applications, particularly loading materials and equipment into structures using pallet trucks or trolleys and for modular pod installation.

Installing and using CantiDeck crane loading platforms improves the safety of personnel working at height, speeds up load out, and is often more cost-effective than complex scaffolding systems.

Plus, decks can be relocated quickly and easily, reducing downtime and maximising crane time on-site.

KEY BENEFITS

QUICK AND SIMPLE TO RELOCATE
Much faster to install and relocate than alternatives, such as complex scaffolding systems, reducing downtime and maximising crane time across a project's duration.

SUITABLE FOR A VARIETY OF LOADS
Each size of deck has a large working load capacity and is available with multiple configurations to suit most applications.

IMPROVES THE SAFETY OF PERSONNEL WORKING AT HEIGHT
Large loading bay simplifies placing and collecting loads, reducing the risk for personnel moving materials in and out of structures.

VERSATILE VERTICAL LOGISTICS
Used for structure load out, materials storage, personnel access and more, our range of decks provide a solution for varying logistics challenges.

STANDARD AND BESPOKE SIZES
Available in a variety of sizes to suit varying structure types. Our Temporary Works and Mechanical Engineering teams can design bespoke sizes for site-specific requirements.

SINGLE PROP DESIGN
The unique single prop design reduces the weight of the deck and the reaction loadings.

REDUCES CRANE TIME
Loading and unloading materials and equipment is quick and easy, releasing the crane for other lifting operations on-site.

COMPREHENSIVE TRAINING
We offer a hybrid course of theory and practical training to ensure any personnel carrying out the installation and relocation of our decks are competent and the operation is safe.

SPECIFICATION

THE RANGE

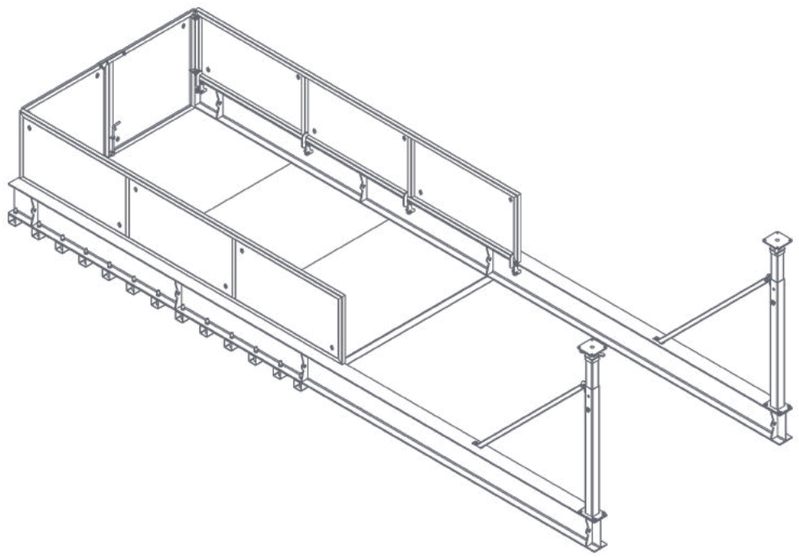

CODE	TYPE	WEIGHT (kg)	WLL[1] (kg)
FF20	CantiDeck Fixed Flush 20	1850	5000 UDL[2]
FF24	CantiDeck Fixed Flush 24	2000	5000 UDL[2]
FF27	CantiDeck Fixed Flush 27	2000	5000 UDL[2]
FF35	CantiDeck Fixed Flush 35	2600	5000 UDL[2]
FF45	CantiDeck Fixed Flush 45	2800	5000 UDL[2]

[1]Working Load Limit.
[2]UDL = Uniformly Distributed Load

SPECIFICATION

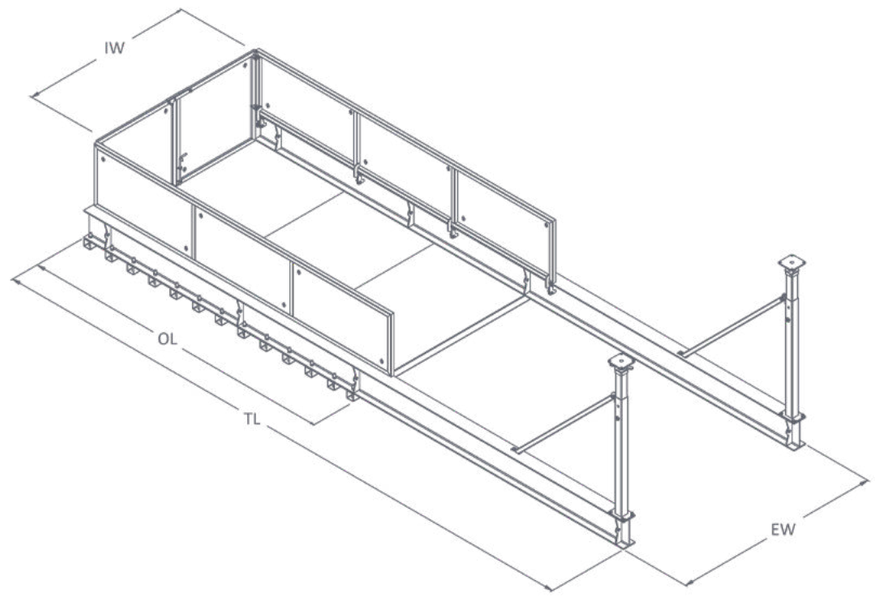

CODE	TOTAL LENGTH (mm)	OUTBOARD LENGTH (mm)	EXTERNAL WIDTH (mm)	INTERNAL WIDTH (mm)
FF20	8000	4000	2000	1550
FF24	8000	4000	2400	1950
FF27	8000	4000	2700	2250
FF35	8000	4000	3500	3050
FF45	8000	4000	4500	4000

OPERATIONAL PROCEDURES

IMPORTANT USAGE NOTES

- Before starting the install, make sure that any exclusion zones are decided and that all personnel involved are aware of them. Also ensure that you have a plan in place to restrict access to those areas.
- When installing the platform, some of the team may be required to work at height. Ensure that you have the right equipment to provide access at height and ensure that all hand-held tools are tethered.
- The maximum permittable wind speed for lifting operations (including moving CantiDeck) is set by the crane manufacture/supplier. Project managers, appointed persons and lift supervisors must carry out a risk assessment of the planned lifts if the wind speed increases, even before it reaches the limit set by the crane manufacturer/supplier, taking into account the physical makeup of the item being lifted and where it is being lifted to.
- The doors on the end of the CantiDeck platforms could be a risk for possible unauthorised access or inadvertent opening. A control measure like a bolt or a padlock can be used to secure the doors shut. If you require this particular functionality, a risk assessment must be completed.
- In case of high winds, remove any loads from CantiDeck loading platforms, so they do not attract any extra wind load, and follow your site-specific health and safety executive guidelines.
- CantiDeck platforms must not be left unsupervised throughout the loading, unloading and whilst a load is on the deck.
- CantiDeck loading platforms have a 5000kg WLL but the Site Surveyor must check the strength of the concrete slab and derate the deck after installation, if required.

IN ADVANCE

01. Communicate the date of install with all relevant site teams, according to standard site practice. Decide on exclusion zones and make all involved personnel aware of them.
02. Consider that some of the team may be required to work at height during the install. Make sure that you have suitable equipment in place to provide access at height and that all hand-held tools are tethered.
03. Check that any machinery or lifting equipment you are intending to use has the capability and a sufficient Working Load Limit to carry out the function that you require it to do.

ON THE DAY

01. Before carrying out the installation of a CantiDeck, check that the site has the necessary safety precautions in place.
02. The install location will need anchor points suitable for attaching leading edge safety equipment to.
03. Create an exclusion zone at both the delivery location and at the location where the platform is being installed.

04. Once the deck has been safely delivered to site, it will need to be unloaded from the vehicle.
05. The CantiDeck has four lifting points.
06. Attach a suitably rated four-leg chain sling to the lifting points.

07. Lift the deck from the transport, allow the truck to exit and place the deck flat on the floor.
08. Release the chains and begin assembling the CantiDeck starting with the side panels.

09. Lift the side panels up 90 degrees and fix the bolts to secure the panels in place. Bolts are only required in two locations on each side of the top holes, highlighted below.

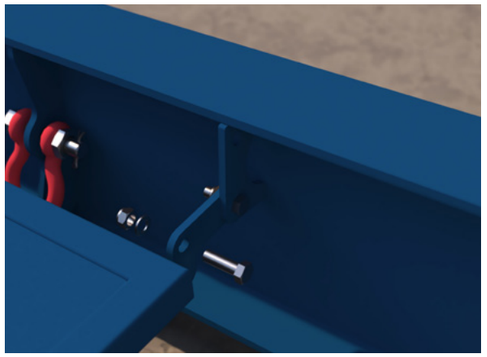

10. Props and braces come pre-assembled ready for installation.
11. Lift the prop and brace into position and secure with bolts.

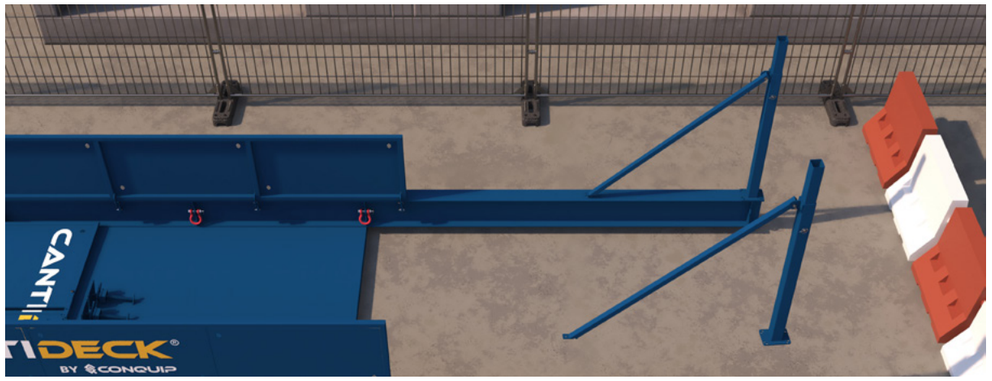

12. Lift one door and hang it on the hinges using M16 bolt and nylon nut connections, ensuring it can pivot on its hinges.
13. Repeat with the other door and then secure the doors with the drop pin and latch. A padlock can be added to the latch for extra security, if required.

14. Screw jacks are to be carried up to the installation location separately.
15. Prior to lifting, ensure tag lines are attached on the front and near the top of the deck on the rear, so they can be removed once installed.

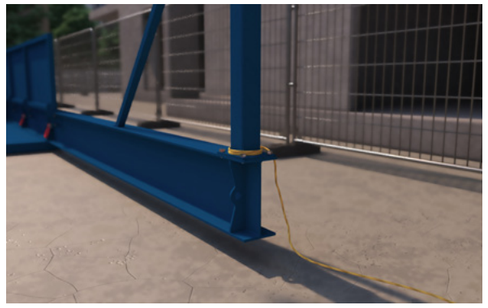

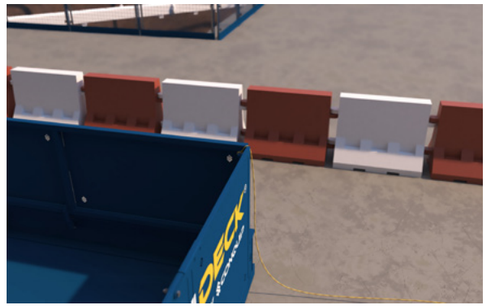

16. Attach the four-leg chain to the lifting points. The use of the chain shorteners may be required to adjust the level of the deck.
17. Take the weight with the crane and lift until the platform sits clear of the ground. The deck should be tilted back slightly.

18. Ensure the load path is clear and guide the deck into position next to the edge of the building.
19. Use the tag lines to guide the platform into the building.

20. Once the platform is butted up against the slab edge, lower off the crane until the beams are sat flush on the slab.

21. Screw jacks should now be added to the props.

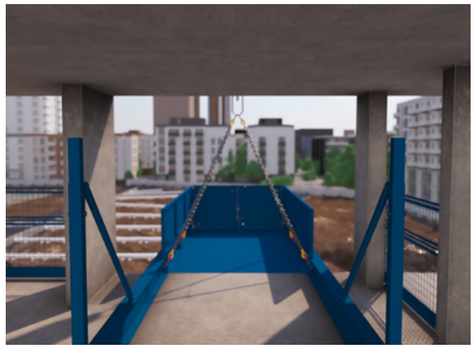

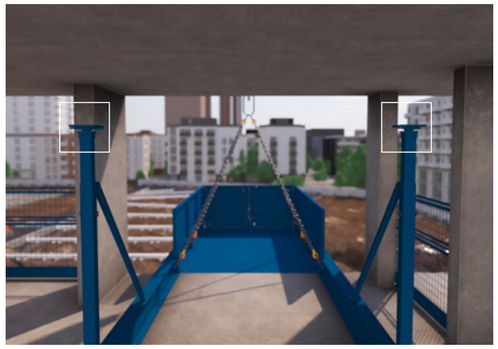

22. Remove the pins from the prop legs and slide the legs up until they are within 150mm of the ceiling. Re-insert the pins ensuring the safety pin is also in position.

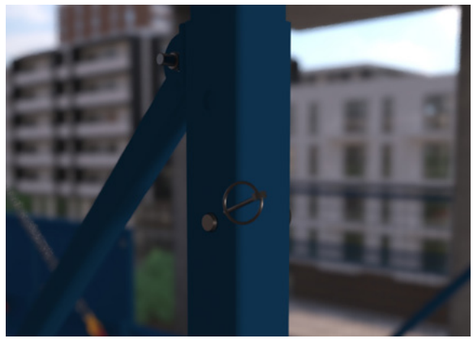

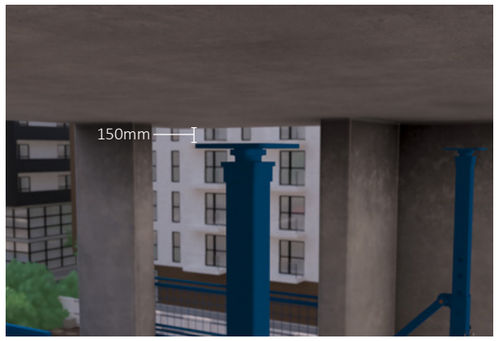

23. Ensure that the base beams are flat on the ground and the vertical legs are at 90 degrees to the base beam. Use a spirit level for best results.

24. Tighten the screw jacks until they are hand tight, then hammer just 1/4 turn extra.

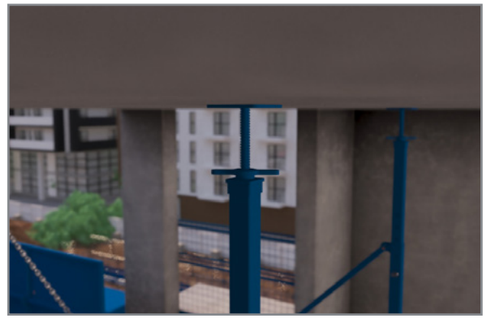

25. Check the screw jacks are tightly secured, slowly lower the crane down and disconnect the lifting chain.

26. Ensure that any gaps either side of the platform are completed with edge protection. Then, remove the exclusion zone on the slab.

27. The CantiDeck has been successfully installed.

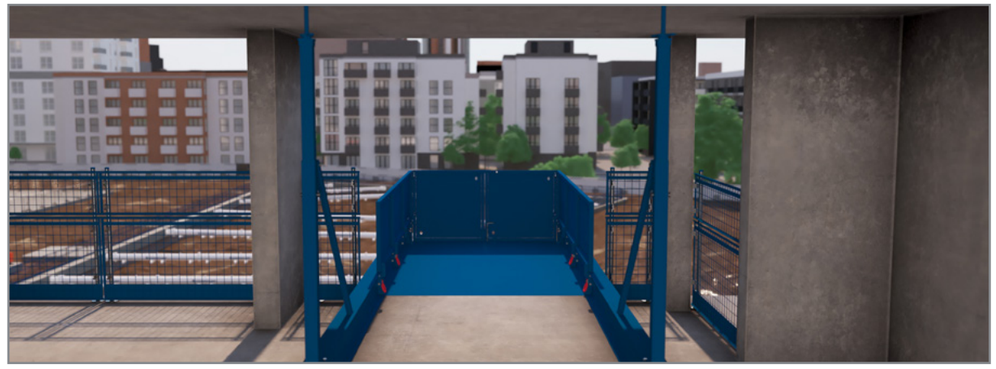

REMOVAL INSTRUCTIONS

01. Create an exclusion zone around the CantiDeck and on ground level. Suitable anchor points for attaching leading edge safety equipment to will also be required.

02. Remove the edge protection from each side to allow the deck to be safely removed from the building.

03. Prior to lifting, attach a tag line to the front and rear of the deck in opposite corners.

04. Attach a suitably-rated four-leg chain to each lifting point.

05. Slowly take the weight of the deck; take care not to lift the deck until the props are released.

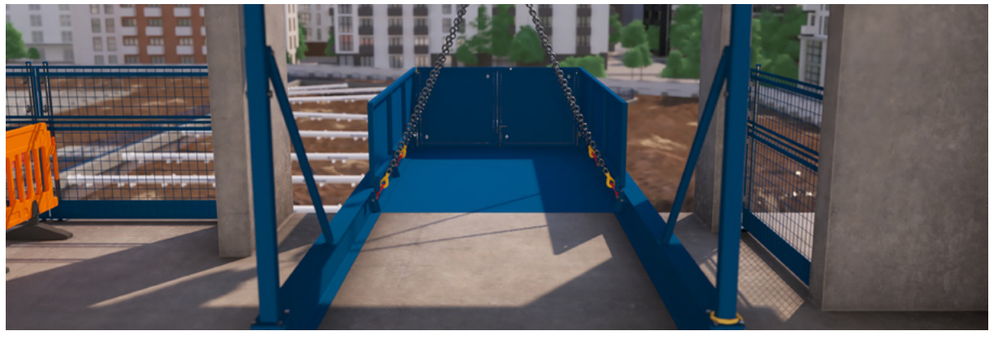

06. Loosen the prop heads from the soffit.

07. Remove the prop pin and lower the props as far as possible.

08. Re-insert the prop pins and clips, then remove the prop heads.

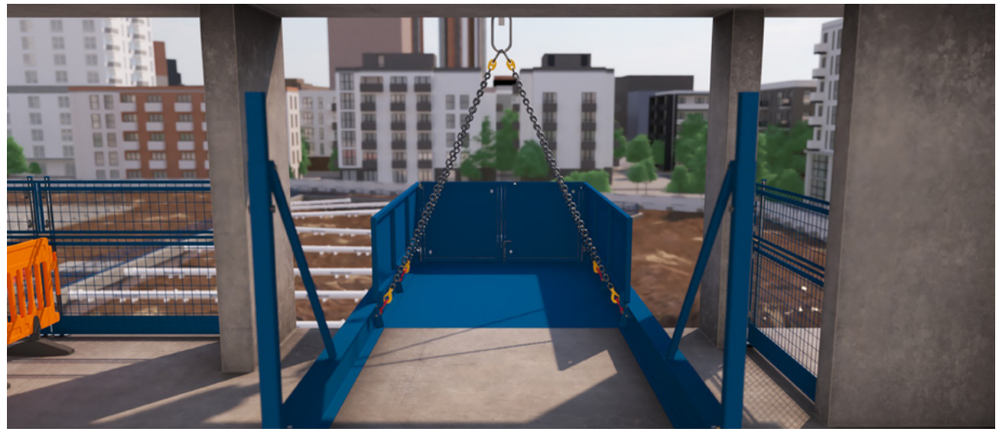

09. Slowly lift the deck and manoeuvre it out of the building.

10. The deck can now be lowered to the ground to be made ready for transport or installed in a new location.

MAINTENANCE & INSPECTION

MAINTENANCE REGIME

- It is mandatory that the equipment is thoroughly examined regularly, by a qualified engineer, to ensure compliance with relevant regulations. Conquip recommend carrying out a thorough examination every six months.
- This equipment may incorporate various loose and detachable items including, but not limited to pins, bolt assemblies and adaption plates. Refer to the separate requirements for the safe use of those items.
- When not being used, store the unit in a clean, upright condition and in a safe place where it will be protected from thieves and unauthorised users.
- This equipment must be inspected by the responsible person before each use and then regularly, as determined by your risk assessment or working practice. If you have any concerns about the equipment's condition or suitability, do not use it.

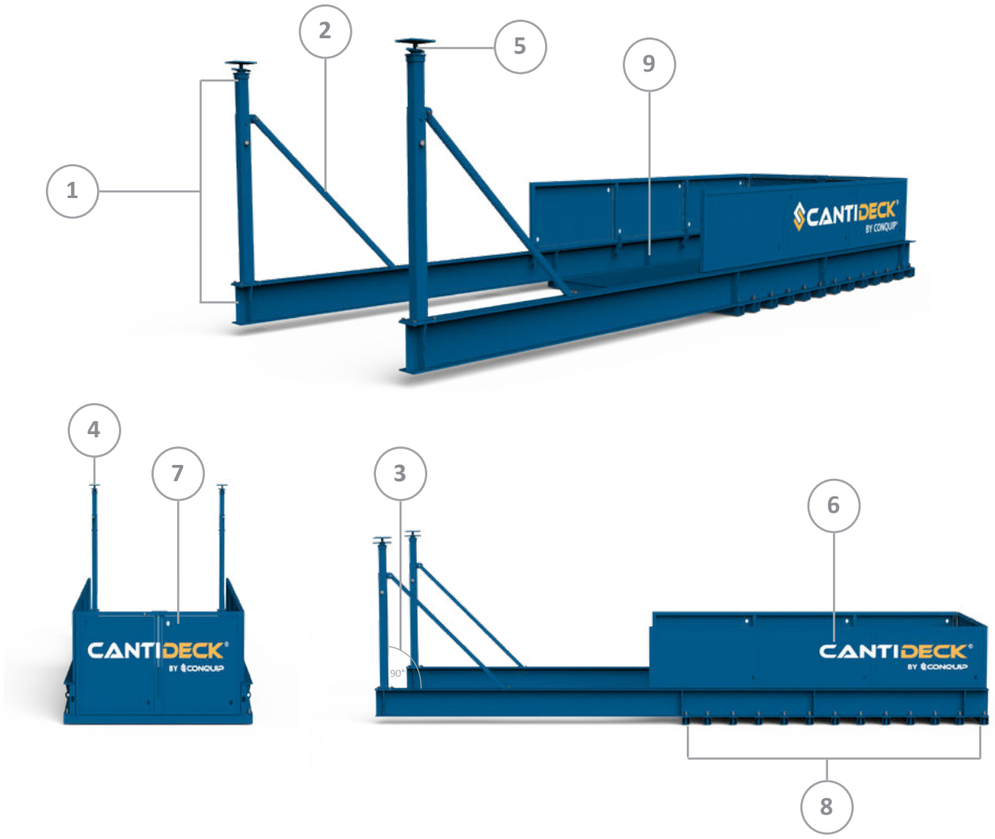

VISUAL INSPECTION CHECKLIST

INSPECTION ITEMS	RESULTS		COMMENTS
DAILY	PASS	FAIL	
Serial Number			CQ.....
Product Code			
Working Load Limit (kg)			
Conforms to user guide specification			
(1) Check base prop and leg assembly			
(2) Check brace bar assembly			
(3) Check prop legs are plumb			
(4) Check prop head to spreader beam fixings or prop flat heads to slab (whichever is applicable)			
(5) Check screw jacks are tight and set to correct height (max 150mm of thread)			
(6) Check sides condition/complete including fixing bolts and pins in place			
(7) Check doors condition/complete including locking assembly			
Check padlock on doors and doors are locked (if applicable)			
Check edge protection installed up to platform edge			
BEFORE INSTALLATION OR RELOCATION			
(8) Visually check that the deck bolts are in place (if applicable)			
(9) Check lifting eyes and check shackles are complete			
Check all nuts and bolts are in place and tight			
Check installation area is ready to receive deck and swept			
Check deck is fitted flush to the floor			

SIGNATURE			
Name	Position	Qualification	Signature & Date

GENERAL SAFETY INSTRUCTIONS

The equipment should be properly operated and maintained to keep it in a safe, efficient operating condition. Be sure that all fixings and components are free of mud or other matter that might cause issues hazardous to the operator, serviceman, or other personnel or equipment. Report all malfunctions to those responsible for maintenance, and do not operate the equipment until corrected. Normal service or maintenance performed as required can prevent unexpected and unnecessary downtime.

This operations manual describes general inspections, servicing and operation with the normal safety precautions required for normal servicing and operating conditions. It is not a guide, however, for abnormal conditions or situations, and therefore, servicemen and operators must be safety conscious and alert to recognise potential servicing or operating safety hazards at all times, and take necessary precautions to assure safe servicing and operation of the machine.

M002
Refer to instructions manual

M004
Wear eye protection

M008
Wear safety footwear

M009
Wear protective gloves

M010
Wear protective clothing

M014
Wear head protection

M015
Wear high-visibility clothing

GENERAL NOTES

- Read this operations manual and learn the operating characteristics and limitations of the equipment. Know what operating clearances the equipment requires.
- Read and understand all the safety signs prior to operation.
- If the safety signs are obstructed by dirt or debris, clean them using mild soap and water prior to operation.
- If the safety signs are damaged or illegible, replace them immediately, prior to operation.
- Be aware of operating hazards that weather changes can create on the job. Know proper procedures to follow when a severe rain or electrical storm strikes.
- Never attempt to operate or work on machinery when not feeling physically fit.
- Never wear loose clothing, rings, watches, heavy gloves etc., that might catch and result in injury.
- Know what safety equipment is required and use it. Such equipment may be: hard hat, safety glasses, reflector type vests, protective gloves and safety footwear.

TERMS & CONDITIONS

CONQUIP ENGINEERING GROUP STANDARD PRODUCT WARRANTY

01. COMMENCEMENT

1.1 This Warranty shall commence on the Commencement Date and shall continue until the earlier of:

(a) the Expiry Date; or

(b) the date on which it may be voided in accordance with clause 4.1(b)

when it shall terminate automatically without notice.

02. DUTY OF GOOD FAITH

2.1 The Purchaser shall in the exercise of its rights under this Warranty and in the compliance with its obligations under this Warranty be subject to and shall in all respects owe and comply with a duty of good faith to the Warrantor.

03. NATURE AND EXTENT OF COVER

3.1 Subject to clause 3.2 the Warrantor agrees and undertakes to the Purchaser that it shall be liable to the Purchaser under and in accordance with the terms of this Warranty in the event that:

(a) prior to the Expiry Date the Purchaser shall notify a Warranty Claim to the Warrantor; and

(b) the Equipment or any relevant part of the Equipment shall have become unusable as the result of defective material or defective workmanship prior to the Expiry Date.

3.2 The Warrantor's obligation under clause 3.1 shall be expressly subject to the provisions of clauses 4, 5 and 6 and conditional upon the Purchaser's compliance in full with the provisions of clause 7.

04. RESTRICTIONS

4.1 The following restrictions apply to this Warranty:

(a) This Warranty is personal to the Purchaser and neither the legal benefit nor legal burden of this warranty may be assigned or novated or otherwise transferred by the Purchaser to any other party. Any purported assignment, novation or transfer shall not be binding upon the Warrantor.

(b) This Warranty shall be void in the event that the Purchaser:

(i) cannot provide authentic and original documentary evidence that the Purchaser has during the period between the Commencement Date and the Expiry Date complied with the Maintenance and Servicing Requirements; and/or

(ii) has, during the period between the Commencement Date and the Expiry Date, exceeded the Purchaser's Usage Cycle Parameters; and/or

(iii) has, during the period between the Commencement Date and the Expiry Date, exceeded the Purchaser's Use Parameters; and/or

(iv) has carried out, or procured the carrying out by any third party of, any repair to the Equipment or any part of the Equipment which is not an Authorised Repair; and/or

(v) has operated the Equipment after having replaced any part of the Equipment with a part which has not been supplied and fitted by the Warrantor; and/or

(vi) has modified the Equipment in any way prior to use.

05. EXCLUSIONS

5.1 The following are excluded from the scope of this Warranty:

(a) Loss of and/ or damage to the Equipment or any part of it resulting from any collision between the Equipment and any other fixed or stationary or mobile object whatsoever, irrespective of whether that collision was or was not caused by the Purchaser; and/or

(b) Loss of and/or damage to any personal property and/or possessions or other equipment not forming part of the Equipment but which is present in or about the Equipment; and/or

(c) loss and/or damage which is covered by any other insurance policy taken out and maintained by the Purchaser or in respect of which the Purchaser has a contractual obligation to do so; and/or

(d) loss and/or damage to the equipment which is consistent with the use by the Purchaser of the Equipment:

(i) in compliance with the Maintenance and Servicing Requirements; and

(ii) in compliance with the Usage Cycle Parameters; and

(iii) in compliance with the Use Parameters; and

(iv) having only carried out Authorised Repairs to the Equipment; and

(v) having all and any replacement parts fitted by the Warrantor; and

(vi) in unmodified form.

06. LIMITATION OF LIABILITY

6.1 The Warrantor's liability to the Purchaser shall be limited as follows:

(a) The Warrantor shall not in any circumstances be liable to the Purchaser for indirect and/or consequential and/or economic loss suffered and/or incurred as the case may be by the Purchaser; and

(b) The Warrantor shall only be liable to the Purchaser for the reasonable and proper costs reasonably and properly incurred by the Purchaser directly in connection with the repair and/or replacement (at the Warrantor's absolute discretion) of the Equipment or any part of the Equipment; and

(c) The Warrantor's liability to the Purchaser shall notwithstanding any other provision of this Warranty, not in any circumstances exceed the Purchase Price of the Equipment.

07. WARRANTY CLAIMS

7.1 The Purchaser shall in respect of any claim against the Warrantor under this Warranty and within 24 hours of the occurrence of the subject matter of the Warranty Claim:

(a) Complete in full and submit to the Warrantor a Warranty Claim in the form annexed to Schedule 4;

(b) Provide date stamped or date identifiable photographs evidencing the claim; and

(c) Make the Equipment or the relevant part of the Equipment available to the Warrantor for inspection within 48 hours of notification of the relevant Warranty Claim.

08. ENTIRE AGREEMENT

8.1 This Warranty constitutes the entire agreement between the parties and supersedes and extinguishes all previous promises, assurances, warranties, representations and understandings between them, whether written or oral, relating to its subject matter.

8.2 Each party agrees that it shall have no remedies in respect of any statement, representation, assurance or warranty (whether made innocently or negligently) that is not set out in this Warranty. Each party agrees that it shall have no claim for innocent or negligent misrepresentation or negligent misstatement based on any statement in this Warranty.

No variation of this Warranty shall be effective unless it is in writing and signed by the parties (or their authorised representatives).

09. WAIVER

No failure or delay by a party to exercise any right or remedy provided under this Warranty or by law shall constitute a waiver of that or any other right or remedy, nor shall it prevent or restrict the further exercise of that or any other right or remedy. No single or partial exercise of such right or remedy shall prevent or restrict the further exercise of that or any other right or remedy.

10. SEVERANCE

10.1 If any provision or part-provision of this Warranty is or becomes invalid, illegal or unenforceable, it shall be deemed deleted, but that shall not affect the validity and enforceability of the rest of this Warranty.

10.2 If any provision or part-provision of this Warranty is deemed deleted under clause 10.1 the parties shall negotiate in good faith to agree a replacement provision that, to the greatest extent possible, achieves the intended commercial result of the original provision.

11. THIRD PARTY RIGHTS

11.1 This Warranty does not give rise to any rights under the Contracts (Rights of Third Parties) Act 1999 to enforce any term of this Warranty.

12. GOVERNING LAW

12.1 This Warranty and any dispute or claim (including non-contractual disputes or claims) arising out of or in connection with it or its subject matter or formation shall be governed by and construed in accordance with the law of England and Wales.

13. JURISDICTION

13.1 Each party irrevocably agrees that the courts of England and Wales shall have exclusive jurisdiction to settle any dispute or claim (including non-contractual disputes or claims) arising out of or in connection with this Warranty or its subject matter or formation.

DESIGN CONFORMITY (EC & UK)

(01) This certificate meets the requirements of the Machinery Directive 2023/42/EC of the European Parliament and Council.

(02) This certificate meets the requirements of the Supply of Machinery (Safety) Regulations 2008.

DETAILS

NAME & ADDRESS OF MANUFACTURER:
Conquip Engineering Group Ltd, Unit 4, Waterbrook Estate, Alton, Hampshire. GU34 2UD

NAME & ADDRESS OF PERSON TO COMPILE TECHNICAL FILE:
Name: Daniel Critchley Address: Conquip Engineering Group, Unit 4, Waterbrook Estate, Alton, Hampshire. GU34 2UD

NAME & ADDRESS OF AUTHORISED REPRESENTATIVE IF ONE HAS BEEN MANDATED BY THE MANUFACTURER:
N/A

NAME, ADDRESS, AND IDENTIFICATION NUMBER OF THE NOTIFIED BODY (01) OR APPROVED BODY (02), WHERE APPLICABLE:
N/A

EQUIPMENT DESCRIPTION

PRODUCT CODES	GENERAL DESCRIPTION / DESIGNATION	WORKING LOAD LIMIT
FF20	CantiDeck Fixed Flush 20	5000kg UDL
FF24	CantiDeck Fixed Flush 24	5000kg UDL
FF27	CantiDeck Fixed Flush 27	5000kg UDL
FF35	CantiDeck Fixed Flush 35	5000kg UDL
FF45	CantiDeck Fixed Flush 45	5000kg UDL

HARMONISED STANDARDS & REGULATIONS

ITEM	CODE	DESCRIPTION
EC DIRECTIVE/ REGULATION	2023/42/EC	Directive 2023/42/EC- new machinery directive
HARMONISED STANDARDS	BS EN ISO 12100:2010	Safety of machinery General principles for design Risk assessment and risk reduction
	BS EN 1993-1-1: 2005	Eurocode 3. Design of steel structures General rules and rules for buildings
	BS EN 13155	The Standard for Cranes. Safety. Non-fixed load lifting attachments.
OTHER REGULATIONS	LOLER 1998	Lifting Operations and Lifting Equipment Regulations 1998 (LOLER)
	PUWER 1998	Provision and Use of Work Equipment Regulations 1998 (PUWER)

DECLARATION

PLACE OF DECLARATION:
Alton

DATE OF DECLARATION:
October 2025

I declare that the above equipment meets the Essential Health and Safety requirements of the

(01) Machinery Directive 2023/42/EC of the European Parliament and Council.

(02) Supply of Machinery (Safety) Regulations 2008 and Section 6 of the Health and Safety at Work Etc. Act 1974.

NAME:	POSITION:	SIGNATURE:
Daniel Critchley	Managing Director	

support@cqegroup.com | +44 (0) 333 300 3470 | www.cqegroup.com

NOTES

TALKING TO US IS EASY

WE'RE HERE TO HELP

Call us on 0333 300 3470
Email us at sales@cqegroup.com
www.cqegroup.com

Copyright © 2025 Conquip Engineering Group. All Rights Reserved.
CantiDeck Fixed Flush - Issue 07