USER GUIDE

FORKLIFT TIPPING SKIP

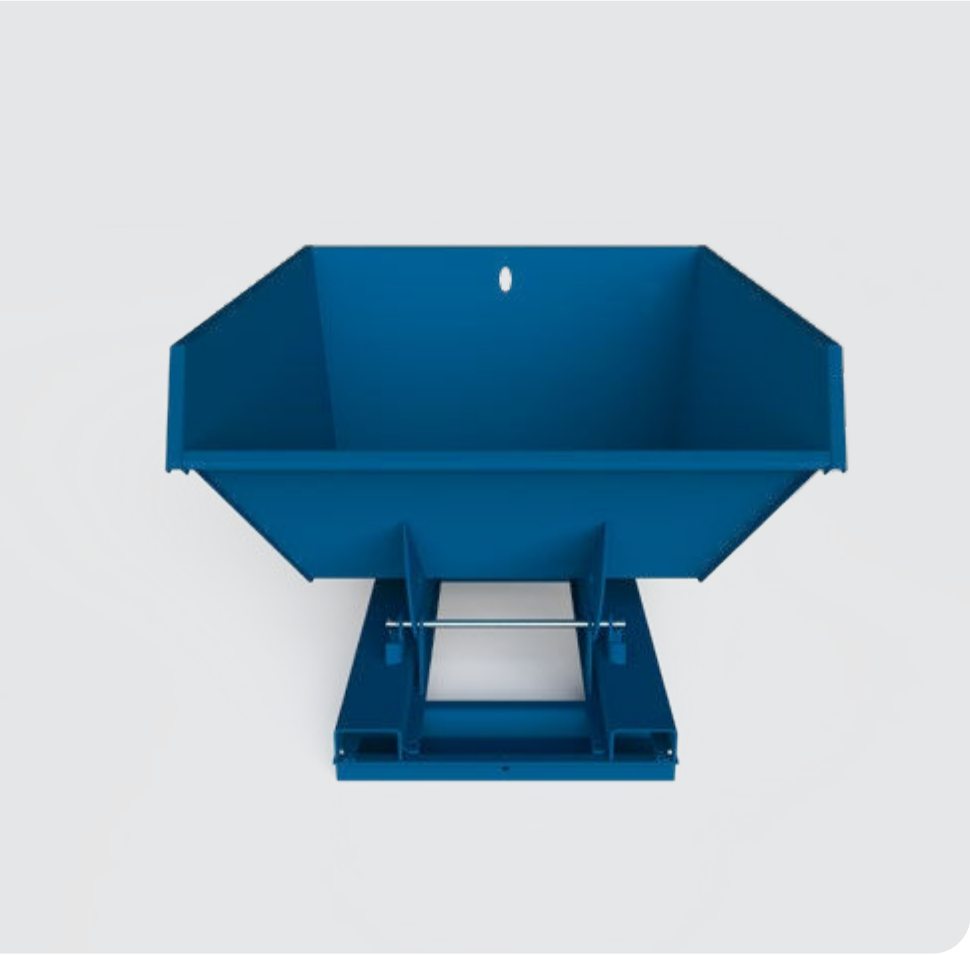

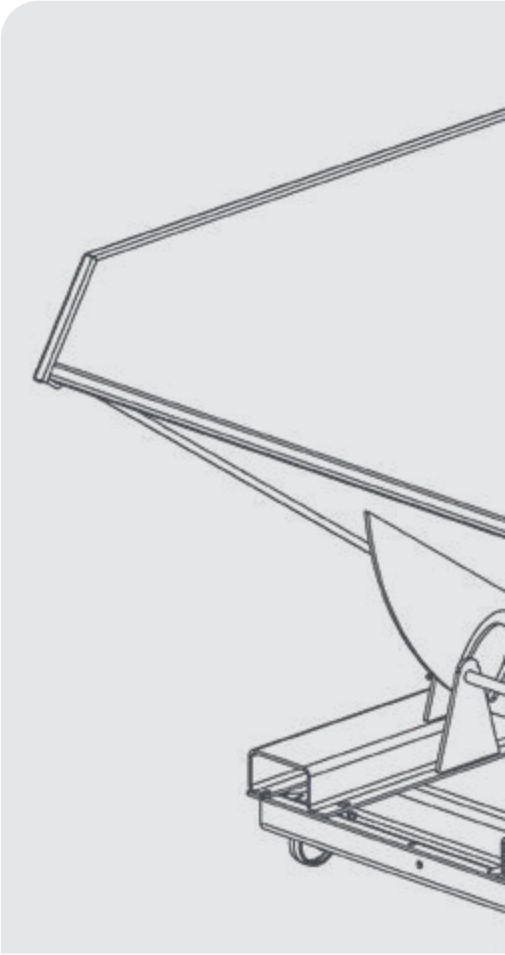

DISCLAIMER

Do not attempt to handle or operate this equipment before you have received sufficient training. Before use, operatives must have carried out all checks featured on the Visual Inspection Sheet on page 17. It is imperative that you have read the General Safety Instructions on page 18 and sufficiently familiarised yourself with the Operational Procedures in this document.

Note that this item is compliant only to the standards specified in this User Guide and it is therefore the duty of the responsible person(s) to review and ensure compliance.

CONTENTS

PRODUCT INFORMATION

INTRODUCTION 04
SPECIFICATION 05
PARTS DIAGRAM 08

INTENDED USE

LIFTING AND CARRYING 12

OPERATIONAL PROCEDURES

IMPORTANT USAGE NOTES 12
ASSEMBLY INSTRUCTIONS 13
USE WITH A FORKLIFT OR TELEHANDLER 13

MAINTENANCE & INSPECTION

MAINTENANCE REGIME 16
VISUAL INSPECTION SHEET 17

GENERAL SAFETY INSTRUCTIONS

SAFETY INSTRUCTIONS 18
GENERAL NOTES 19

LEGAL

TERMS AND CONDITIONS 20
EC DESIGN CONFORMITY 24
STANDARDS AND REGULATIONS APPLICABLE 25

INTRODUCTION

OVERVIEW

The Conquip Forklift Tipping Skip is the choice for many sites and leading plant companies. Its primary function is for the transportation of waste material.

Its heavy-duty design and rugged construction means it can withstand the most rigorous site conditions. The narrow width of the 500-litre skips allows them to fit through standard width doorways, ideal for site teams on housebuilding projects.

Controlled by a release lever, the skip automatically tips to discharge its load and returns to its upright position after it has emptied.

The Forklift Tipping Skip comes complete with a safety restraint chain as standard, protected catch mechanism and side entry fork pockets for easy manoeuvrability.

KEY BENEFITS

- Standard size fork pockets reduces the need to adjust forks.
- The narrow design of the 500-litre models ensures they can fit through standard width doorways.
- Additional side entry fork pockets for easy manoeuvrability.
- Safety restraint chain provided as standard.

CUSTOMISATION OPTIONS

- Can be fitted with heel pin restraints.
- Steering handle for 500-litre models available on request.
- Can be painted in the Institute of Civil Engineers standard colours of your choice (see colour chart on right).
- Customer branding available on request.
- Can be fitted with a steel lid if required.

COLOUR	USE
	Asbestos
	Hazardous
	Clinical
	Plasterboard
	Inert
	Mixed
	Metal
	Wood
	Packaging

SPECIFICATION

THE RANGE

CODE	TYPE	WEIGHT (kg)	WLL* (kg)	CAPACITY (litres)
FA803AO-00500	Standard Forklift Tipping Skip 500	185	1000	500
FA802AO-00500	Standard with Castors 500	200	1000	500
FA803AO-01200	Standard Forklift Tipping Skip 1200	210	2000	1200
FA802AO-01200	Standard with Castors 1200	225	2000	1200
FA803AO-01500	Standard Forklift Tipping Skip 1500	220	2000	1500
CA111AO-00500	Cranelift Forklift Tipping Skip 500	190	1000	500
CA111AL-01200	Cranelift Forklift Tipping Skip 1200	215	1000	1200
CA151-01200	Cranelift with Castors 1200	230	1000	1200

*Working Load Limit

SPECIFICATION

STANDARD FORKLIFT TIPPING SKIP

PRODUCT CODE	ITEM
FA803AO-00500	Standard Forklift Tipping Skip 500
FA802AO-00500	Standard with Castors 500
FA803AO-01200	Standard Forklift Tipping Skip 1200
FA802AO-01200	Standard with Castors 1200
FA802AO-01500	Standard Forklift Tipping Skip 1500

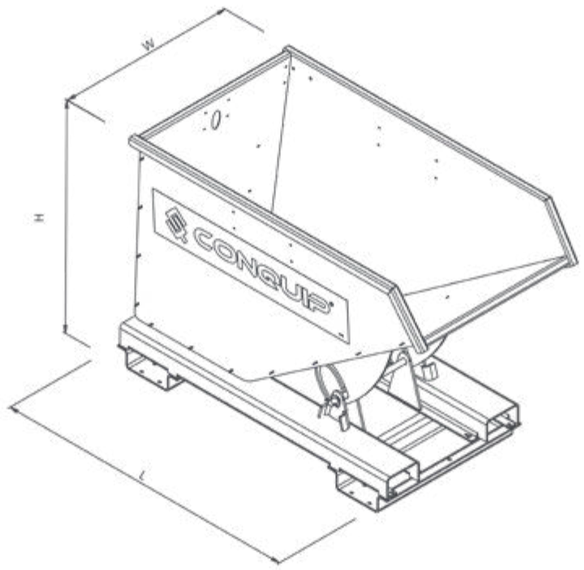

LENGTH (mm)	WIDTH (mm)	HEIGHT (mm)
1463	740	990
1463	740	1120
1714	1225	1070
1714	1225	1200
1715	1495	1070

SPECIFICATION

CRANELIFT FORKLIFT TIPPING SKIP

PRODUCT CODE	ITEM
CA111AO-00500	Cranelift Forklift Tipping Skip 500
CA111AL-01200	Cranelift Forklift Tipping Skip 1200
CA151-01200	Cranelift with Castors 1200

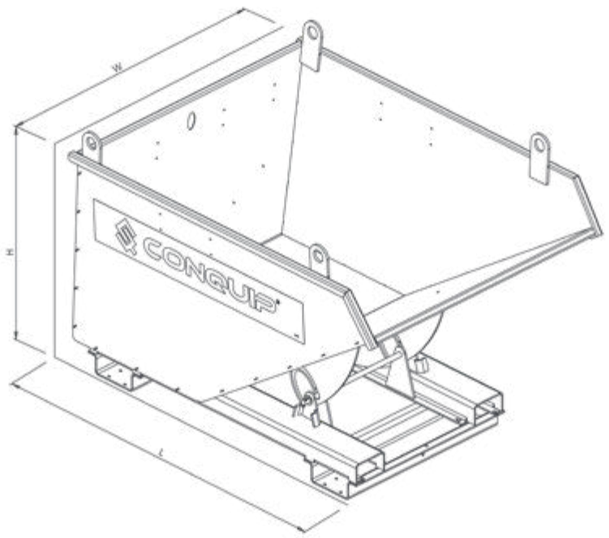

LENGTH (mm)	WIDTH (mm)	HEIGHT (mm)
1463	740	1105
1714	1225	1185
1714	1225	1315

PARTS DIAGRAM

STANDARD & CRANELIFT 500

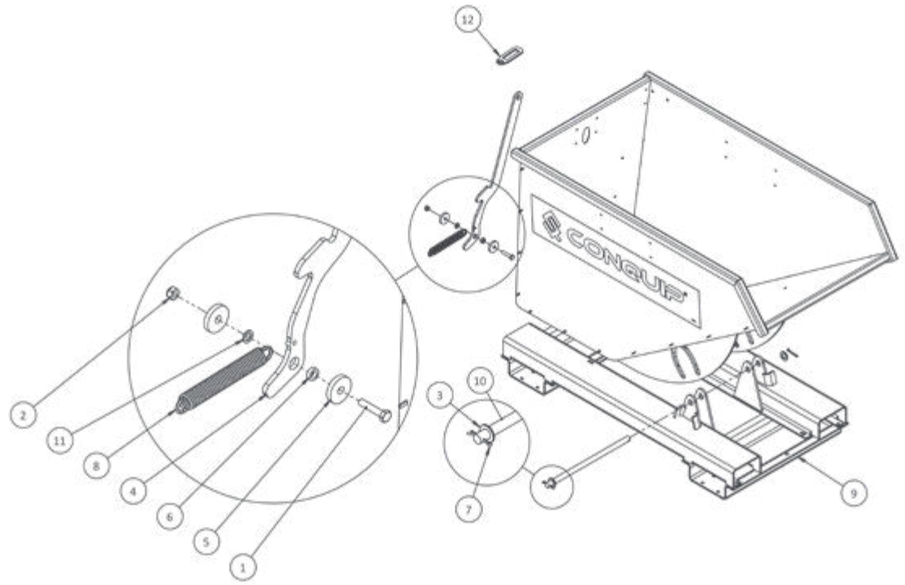

ITEM NUMBER	PART	DESCRIPTION	QUANTITY
1	NS800715	M10 x 50 Hex Head Set Screw	1
2	NS800013	M10 Nyloc Nut	1
3	NS800668	M20 Washer	2
4	ZZ110143	Lever	1
5	ZZ960044	Washer 8 x 45(OD) x 12.5(ID)mm	2
6	ZZ960045	Washer 6 x 20(OD) x 12.5(ID)mm	1
7	ZZ960027	Split Pin 5 x 45mm	2
8	ZZ110000	Tipping Skip Spring	1
9	ZZ110146	Tipping Skip Base 500 litres	1
10	ZZ110129	Pivot Pin 20 x 438mm	1
11	ZZ960081	Washer 2.5 x 20(OD) x 12.5(ID)mm	1
12	ZZ110005	Tipping Skip Locking Handle	1
Not Drawn	ZZ110008	Safety Restraint Chain	1

NOTE: These parts are for this model, they may differ for previous versions. Please contact Conquip with any queries.

PARTS DIAGRAM

STANDARD & CRANELIFT 1200 / 1500

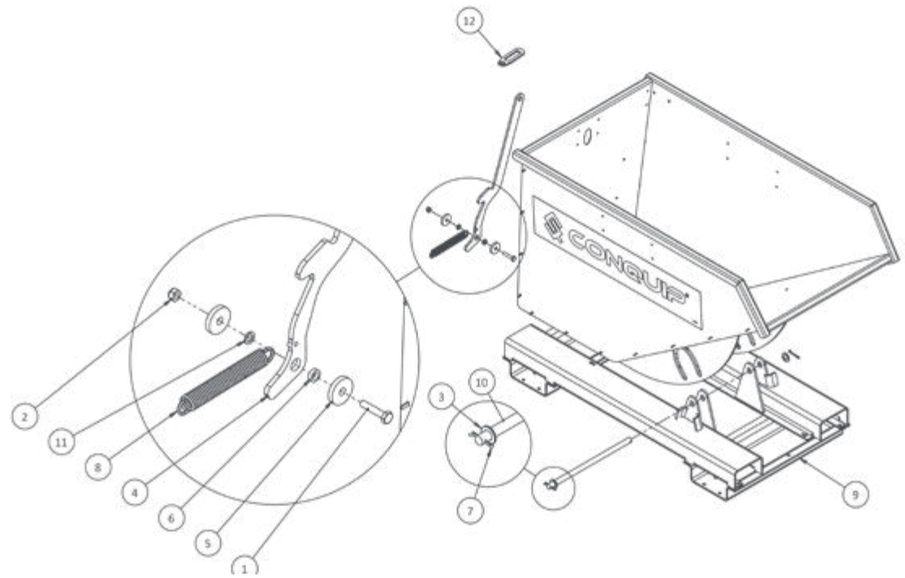

ITEM NUMBER	PART	DESCRIPTION	QUANTITY
1	NS800715	M10 x 50 Hex Head Set Screw	1
2	NS800013	M10 Nyloc Nut	1
3	NS800668	M20 Washer	2
4	ZZ110145	Lever	1
5	ZZ960044	Washer 8 x 45(OD) x 12.5(ID)mm	2
6	ZZ960045	Washer 6 x 20(OD) x 12.5(ID)mm	1
7	ZZ960027	Split Pin 5 x 45mm	2
8	ZZ110000	Tipping Skip Spring	1
9	ZZ110147	Tipping Skip Base 1200 / 1500 litres	1
10	ZZ110147	Pivot Pin 20 x 600mm	1
11	ZZ960081	Washer 2.5 x 20(OD) x 12.5(ID)mm	1
12	ZZ110005	Tipping Skip Locking Handle	1
Not Drawn	ZZ110008	Safety Restraint Chain	1

NOTE: These parts are for this model, they may differ for previous versions. Please contact Conquip with any queries.

PARTS DIAGRAM

CASTORS

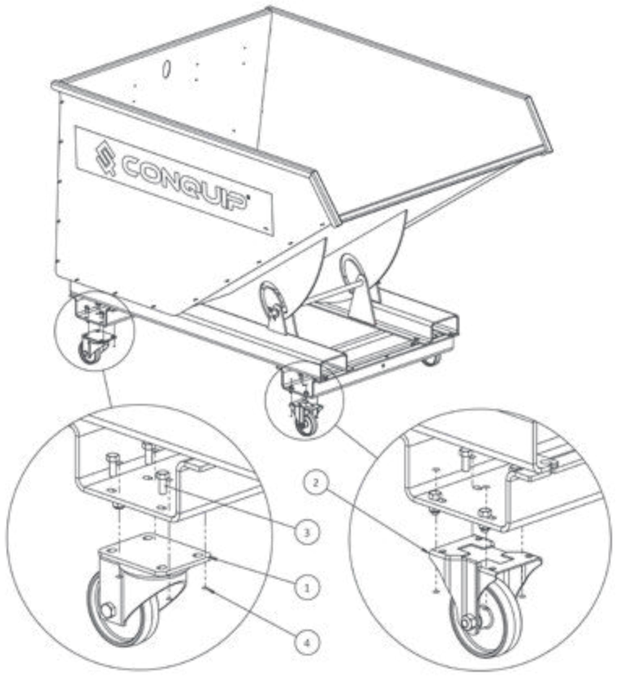

ITEM NUMBER	PART	DESCRIPTION	QUANTITY
1	ZZ110013	Swivel Cast Iron Castor Wheel 100mm Ø	2
2	ZZ110012	Fixed Cast Iron Castor Wheel 100mm Ø	2
3	NS800160	M8 x 20mm Hex Head Set Screw	16
4	NS800011	M8 Nyloc Nut	16

NOTE: These parts are for this model, they may differ for previous versions. Please contact Conquip with any queries.

PARTS DIAGRAM

OPTIONAL HANDLE (500-LITRE MODELS ONLY)

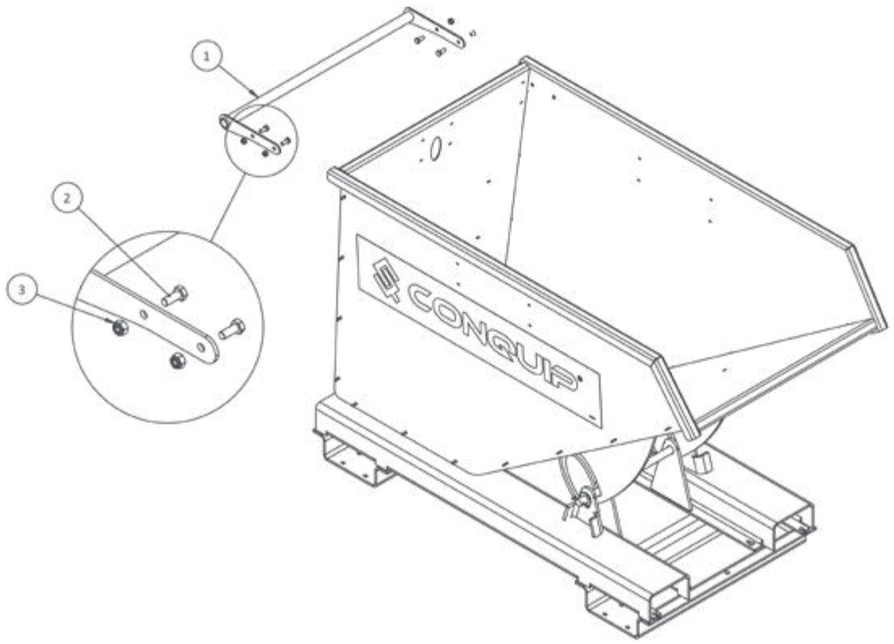

ITEM NUMBER	PART	DESCRIPTION	QUANTITY
1	ZZ110131	Handle	1
2	NS800160	M8 x 20mm Hex Head Set Screw	1
3	NS800011	M8 Nyloc Nut	2

NOTE: These parts are for this model, they may differ for previous versions. Please contact Conquip with any queries.

INTENDED USE

LIFTING AND CARRYING

Forklifts and Telehandlers are designed to lift and carry loads. When used with an attachment, the deration chart must be adhered to.

Underslung loads may be subject to specific safety precautions including risk assessments and operator training.

OPERATIONAL PROCEDURES

IMPORTANT USAGE NOTES

- Ensure the work area is clear of all obstructions.
- Only lift and move the skip if the load is level.
- Always ensure that the safety restraint chain is secured to the operating machine.
- Make sure that any site operatives are clear of the loading/unloading area and everyone stands well clear when tipping.
- If using a crane lift skip, the 4-leg sling must be disconnected from the lifting points before tipping.
- Check that the skip is suitably rated to lift the load and of the correct size.
- Ensure adequate room around the unit for the operator to work safely.
- For Cranelift models, use a suitably rated 4-leg lifting chain, with self-locking hooks.
- Take care not to tangle the chains when attaching them to the skip.
- Always use a signaller who can clearly communicate with the crane operator.

ASSEMBLY INSTRUCTIONS

01. Before fitting the castors, the skip will need to be raised on suitable supports which allow adequate and safe access to the underside of the fork pockets.
02. The skip must be locked in the 'tipped back' position. You must work from the side of the skip not from the front.
03. With the skip base suitably raised and supported, offer the castor up to the fixing position on the underside of the fork pocket.
04. Align the securing holes, then insert a bolt from within the fork pocket through the castors base plate. Secure with the nyloc nut.

05. Repeat this with the remaining nuts and bolts. Fit the remaining three castors as described above. Note: It is not possible to use the fork pockets when fitted with wheels.

USE WITH A FORKLIFT OR TELEHANDLER

01. Only load the skip when fully lowered to the ground and locked back.
02. Load the skip ensuring the load is no wider, longer or higher than the side walls.
03. Set the forklift's forks to the correct width for the skip's fork pockets. Make sure that they are equidistant from the centre.
04. Drive the forklift to the skip, aligning the forks with the skip's fork pockets.
05. Double check that all is correctly aligned, then move the forklift forward until the forks are fully inserted into the pockets.
06. Switch off the forklift engine and apply parking brake.
07. Insert the heel pins through the end of each fork pocket so that it passes behind the heel of the fork.
08. Retain in place with the linch pin.
09. Loop the safety restraint chain around the forklift carriage, ensuring that it does not foul any of the forklift's moving parts.
10. If the skip cannot be secured correctly, do not continue, contact Conquip Engineering Group for advice.

11. The release lever should always be held captive by the retainer plate. (Fig 1)

FIG 1

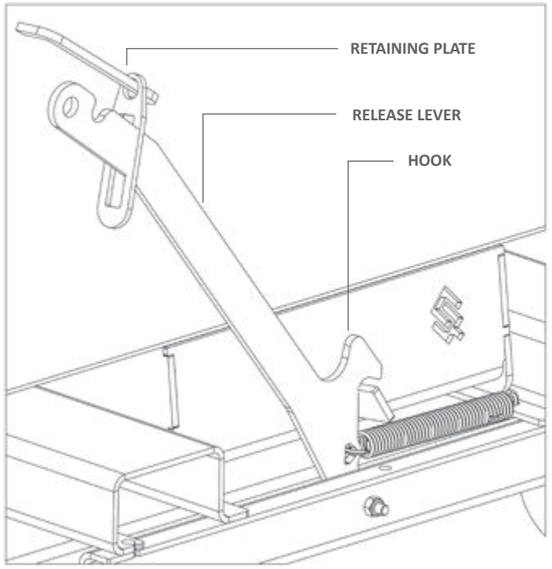

12. Once prepared, clear all personnel and tools. Raise the unit just enough to allow sufficient clearance from the ground when travelling. Drive the forklift to the discharge area.
13. The skip is designed to automatically tip and return once the release lever has been activated. Speed of discharge will depend upon load weight distribution and where applicable, the tilt angle of the forklift mast.
14. To tip the skip, slide the retainer plate clear, pull down on the release lever.
15. If discharging into a traditional skip, raise the unit so that it clears the walls of the skip, then drive forward until positioned over the skip. Tilt the mast forward to give a slight forward angle then move the release lever.
16. Be ready for the skip to return automatically once empty. Finally, check that the release lever has fully engaged before moving away from the skip and lowering the unit.
17. Once empty, lowered and locked, disconnect the safety chain or heel pins.
    IMPORTANT: If lifting with a crane, the 4-leg sling must be disconnected from the lifting points before discharge.

MAINTENANCE & INSPECTION

MAINTENANCE REGIME

- It is mandatory that the equipment is thoroughly examined regularly, by a qualified engineer, to ensure compliance with relevant regulations. Conquip recommend carrying out a thorough examination every six months.
- This equipment may incorporate various loose and detachable items including, but not limited to pins, bolt assemblies and adaption plates. Refer to the separate requirements for the safe use of those items.
- When not being used, store the unit in a clean, upright condition and in a safe place where it will be protected from thieves and unauthorised users.
- This equipment must be inspected by the responsible person before each use and then regularly, as determined by your risk assessment or working practice. If you have any concerns about the machinery's condition or suitability, do not use it.

VISUAL INSPECTION CHECKLIST

INSPECTION ITEMS	RESULTS		COMMENTS
	SATISFACTORY	UNSATISFACTORY	
Serial Number			CQ.....
Product Code			
Working Load Limit (Kg)			
Conforms to user guide specification			
Base bent or distorted			
Main body bent or split			
Safety restraint chain fitted and working			
Handle lock operation			
Handle return spring attached			
Castors functioning (if applicable)			
Lifting points bent or distorted (if applicable)			
General visual inspection of the body.			
SIGNATURE			
Name	Position	Qualification	Signature & Date

GENERAL SAFETY INSTRUCTIONS

The machinery should be properly operated and maintained to keep it in a safe, efficient operating condition. Be sure that all fixings and components are free of mud or other matter that might cause issues hazardous to the operator, serviceman, or other personnel or equipment. Report all malfunctions to those responsible for maintenance, and do not operate the equipment until corrected. Normal service or maintenance performed as required can prevent unexpected and unnecessary downtime.

This operations manual describes general inspections, servicing and operation with the normal safety precautions required for normal servicing and operating conditions. It is not a guide, however, for abnormal conditions or situations, and therefore, servicemen and operators must be safety conscious and alert to recognise potential servicing or operating safety hazards at all times, and take necessary precautions to assure safe servicing and operation of the machine.

M002
Refer to instructions manual

M004
Wear eye protection

M008
Wear safety footwear

M009
Wear protective gloves

M010
Wear protective clothing

M014
Wear head protection

M015
Wear high-visibility clothing

GENERAL NOTES

- Read this operations manual and learn the operating characteristics and limitations of the machinery. Know what operating clearances the machine requires.
- Read and understand all the safety signs prior to operation.
- If the safety signs are obstructed by dirt or debris, clean them using mild soap and water prior to operation.
- If the safety signs are damaged or illegible, replace them immediately, prior to operation.
- Be aware of operating hazards that weather changes can create on the job. Know proper procedures to follow when a severe rain or electrical storm strikes.
- Never attempt to operate or work on machinery when not feeling physically fit.
- Never wear loose clothing, rings, watches, heavy gloves etc., that might catch and result in injury.
- Know what safety equipment is required and use it. Such equipment may be: hard hat, safety glasses, reflector type vests, protective gloves and safety footwear.

TERMS & CONDITIONS

CONQUIP ENGINEERING GROUP STANDARD PRODUCT WARRANTY

01. COMMENCEMENT

1.1 This Warranty shall commence on the Commencement Date and shall continue until the earlier of:

(a) the Expiry Date; or

(b) the date on which it may be voided in accordance with clause 4.1(b)

when it shall terminate automatically without notice.

02. DUTY OF GOOD FAITH

2.1 The Purchaser shall in the exercise of its rights under this Warranty and in the compliance with its obligations under this Warranty be subject to and shall in all respects owe and comply with a duty of good faith to the Warrantor.

03. NATURE AND EXTENT OF COVER

3.1 Subject to clause 3.2 the Warrantor agrees and undertakes to the Purchaser that it shall be liable to the Purchaser under and in accordance with the terms of this Warranty in the event that:

(a) prior to the Expiry Date the Purchaser shall notify a Warranty Claim to the Warrantor; and

(b) the Equipment or any relevant part of the Equipment shall have become unusable as the result of defective material or defective workmanship prior to the Expiry Date.

3.2 The Warrantor's obligation under clause 3.1 shall be expressly subject to the provisions of clauses 4, 5 and 6 and conditional upon the Purchaser's compliance in full with the provisions of clause 7.

04. RESTRICTIONS

4.1 The following restrictions apply to this Warranty:

(a) This Warranty is personal to the Purchaser and neither the legal benefit nor legal burden of this warranty may be assigned or novated or otherwise transferred by the Purchaser to any other party. Any purported assignment, novation or transfer shall not be binding upon the Warrantor.

(b) This Warranty shall be void in the event that the Purchaser:

(i) cannot provide authentic and original documentary evidence that the Purchaser has during the period between the Commencement Date and the Expiry Date complied with the Maintenance and Servicing Requirements; and/or

(ii) has, during the period between the Commencement Date and the Expiry Date, exceeded the Purchaser's Usage Cycle Parameters; and/or

(iii) has, during the period between the Commencement Date and the Expiry Date, exceeded the Purchaser's Use Parameters; and/or

(iv) has carried out, or procured the carrying out by any third party of, any repair to the Equipment or any part of the Equipment which is not an Authorised Repair; and/or

(v) has operated the Equipment after having replaced any part of the Equipment with a part which has not been supplied and fitted by the Warrantor; and/or

(vi) has modified the Equipment in any way prior to use.

05. EXCLUSIONS

5.1 The following are excluded from the scope of this Warranty:

(a) Loss of and/ or damage to the Equipment or any part of it resulting from any collision between the Equipment and any other fixed or stationary or mobile object whatsoever, irrespective of whether that collision was or was not caused by the Purchaser; and/or

(b) Loss of and/or damage to any personal property and/or possessions or other equipment not forming part of the Equipment but which is present in or about the Equipment; and/or

(c) loss and/or damage which is covered by any other insurance policy taken out and maintained by the Purchaser or in respect of which the Purchaser has a contractual obligation to do so; and/or

(d) loss and/or damage to the equipment which is consistent with the use by the Purchaser of the Equipment:

(i) in compliance with the Maintenance and Servicing Requirements; and

(ii) in compliance with the Usage Cycle Parameters; and

(iii) in compliance with the Use Parameters; and

(iv) having only carried out Authorised Repairs to the Equipment; and

(v) having all and any replacement parts fitted by the Warrantor; and

(vi) in unmodified form.

06. LIMITATION OF LIABILITY

6.1 The Warrantor's liability to the Purchaser shall be limited as follows:

(a) The Warrantor shall not in any circumstances be liable to the Purchaser for indirect and/or consequential and/or economic loss suffered and/or incurred as the case may be by the Purchaser; and

(b) The Warrantor shall only be liable to the Purchaser for the reasonable and proper costs reasonably and properly incurred by the Purchaser directly in connection with the repair and/or replacement (at the Warrantor's absolute discretion) of the Equipment or any part of the Equipment; and

(c) The Warrantor's liability to the Purchaser shall notwithstanding any other provision of this Warranty, not in any circumstances exceed the Purchase Price of the Equipment.

07. WARRANTY CLAIMS

7.1 The Purchaser shall in respect of any claim against the Warrantor under this Warranty and within 24 hours of the occurrence of the subject matter of the Warranty Claim:

(a) Complete in full and submit to the Warrantor a Warranty Claim in the form annexed to Schedule 4;

(b) Provide date stamped or date identifiable photographs evidencing the claim; and

(c) Make the Equipment or the relevant part of the Equipment available to the Warrantor for inspection within 48 hours of notification of the relevant Warranty Claim.

08. ENTIRE AGREEMENT

8.1 This Warranty constitutes the entire agreement between the parties and supersedes and extinguishes all previous promises, assurances, warranties, representations and understandings between them, whether written or oral, relating to its subject matter.

8.2 Each party agrees that it shall have no remedies in respect of any statement, representation, assurance or warranty (whether made innocently or negligently) that is not set out in this Warranty. Each party agrees that it shall have no claim for innocent or negligent misrepresentation or negligent misstatement based on any statement in this Warranty.

No variation of this Warranty shall be effective unless it is in writing and signed by the parties (or their authorised representatives).

09. WAIVER

No failure or delay by a party to exercise any right or remedy provided under this Warranty or by law shall constitute a waiver of that or any other right or remedy, nor shall it prevent or restrict the further exercise of that or any other right or remedy. No single or partial exercise of such right or remedy shall prevent or restrict the further exercise of that or any other right or remedy.

10. SEVERANCE

10.1 If any provision or part-provision of this Warranty is or becomes invalid, illegal or unenforceable, it shall be deemed deleted, but that shall not affect the validity and enforceability of the rest of this Warranty.

10.2 If any provision or part-provision of this Warranty is deemed deleted under clause 10.1 the parties shall negotiate in good faith to agree a replacement provision that, to the greatest extent possible, achieves the intended commercial result of the original provision.

11. THIRD PARTY RIGHTS

11.1 This Warranty does not give rise to any rights under the Contracts (Rights of Third Parties) Act 1999 to enforce any term of this Warranty.

12. GOVERNING LAW

12.1 This Warranty and any dispute or claim (including non-contractual disputes or claims) arising out of or in connection with it or its subject matter or formation shall be governed by and construed in accordance with the law of England and Wales.

13. JURISDICTION

13.1 Each party irrevocably agrees that the courts of England and Wales shall have exclusive jurisdiction to settle any dispute or claim (including non-contractual disputes or claims) arising out of or in connection with this Warranty or its subject matter or formation.

DESIGN CONFORMITY (EC & UK)

(01) This certificate meets the requirements of the Machinery Directive 2023/42/EC of the European Parliament and Council.

(02) This certificate meets the requirements of the Supply of Machinery (Safety) Regulations 2008.

DETAILS

NAME & ADDRESS OF MANUFACTURER:
Conquip Engineering Group Ltd, Unit 4, Waterbrook Estate, Alton, Hampshire. GU34 2UD

NAME & ADDRESS OF PERSON TO COMPILE TECHNICAL FILE:
Name: Daniel Critchley Address: Conquip Engineering Group, Unit 4, Waterbrook Estate, Alton, Hampshire. GU34 2UD

NAME & ADDRESS OF AUTHORISED REPRESENTATIVE IF ONE HAS BEEN MANDATED BY THE MANUFACTURER:
N/A

NAME, ADDRESS, AND IDENTIFICATION NUMBER OF THE NOTIFIED BODY (01) OR APPROVED BODY (02), WHERE APPLICABLE:
N/A

EQUIPMENT DESCRIPTION

PRODUCT CODE(S)	GENERAL DESCRIPTION	WORKING LOAD LIMIT
FA803AO-00500	Standard Forklift Tipping Skip 500	1000kg
FA802AO-00500	Standard with Castors 500	1000kg
FA803AO-01200	Standard Forklift Tipping Skip 1200	2000kg
FA802AO-01200	Standard with Castors 1200	2000kg
FA803AO-01500	Standard Forklift Tipping Skip 1500	2000kg
CA111AO-00500	Cranelift Forklift Tipping Skip 500	1000kg
CA111AL-01200	Cranelift Forklift Tipping Skip 1200	1000kg
CA151-01200	Cranelift with Castors 1200	1000kg

HARMONISED STANDARDS & REGULATIONS

ITEM	CODE	DESCRIPTION
EC DIRECTIVE/ REGULATION	2023/42/EC	Directive 2023/42/EC - new machinery directive
HARMONISED STANDARDS	BS EN ISO 12100:2010	Safety of machinery General principles for design Risk assessment and risk reduction
	BS EN 1993-1-1: 2005	Eurocode 3. Design of steel structures General rules and rules for buildings
	BS EN 13155	Cranes- Safety- Non-fixed load lifting attachments
OTHER REGULATIONS	LOLER 1998	Lifting Operations and Lifting Equipment Regulations 1998 (LOLER)
	PUWER 1998	Provision and Use of Work Equipment Regulations 1998 (PUWER)

DECLARATION

PLACE OF DECLARATION:
Alton

DATE OF DECLARATION:
February 2026

I declare that the above equipment meets the Essential Health and Safety requirements of the

(01) Machinery Directive 2023/42/EC of the European Parliament and Council.

(02) Supply of Machinery (Safety) Regulations 2008 and Section 6 of the Health and Safety at Work Etc. Act 1974.

NAME:	POSITION:	SIGNATURE:
Daniel Critchley	Managing Director	

support@cqegroup.com | +44 (0) 333 300 3470 | www.cqegroup.com

NOTES

TALKING TO US IS EASY

WE'RE HERE TO HELP

Call us on 0333 300 3470
Email us at sales@cqegroup.com
www.cqegroup.com

Copyright © 2026 Conquip Engineering Group. All Rights Reserved.
Forklift Tipping Skip - Issue 09