

Barcode: 5060452080987

flamstor™

Product code: FS2.0

- Ultra secure walk-in hazardous storage unit.
- Designed to store larger quantities safely and securely.
- Heavy-duty shelving with fully welded sump base.

Product features

- 2x 5-lever deadlock
- Crane lifting eyes
- COSHH compliant
- Sump capacity (400L)
- Fire resistant
- No detachable parts
- Safety signage
- Forklift skids

Product specifications

Weight	570kg
Colour	Traffic red: RAL 3020
Suitable for	Outdoor storage of flammables or chemicals
Finished coating	Durable paint finish
Material & thickness	1.5mm and 2.5mm steel
Quantity of keys	3 keys
How are castors fitted?	Not applicable
Other sizes available	5 other sizes
Ventilation	Yes
Qty of shelves as standard	2 shelves

Dimensions

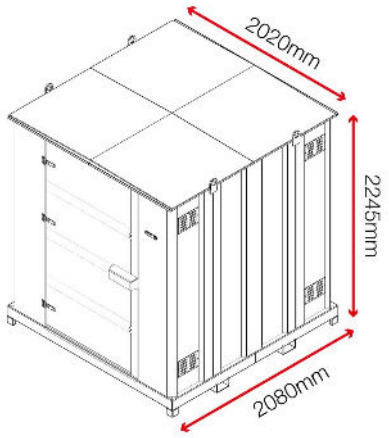

Related products - Contact Armorgard to find out more



Forma-Stor COSHH FR200-C



Forma-Stor COSHH FR300-C



FlamStor FSC5



FlamStor FSC4

