

Barcode: 5060452080802
Version: v100.1

safestor™

Product code: HFC1

- Hazardous storage cupboard for storing flammables or chemicals.
- Liquid-tight sump to contain spillages.
- Adjustable feet ensures unit remains level on uneven ground.

Product features

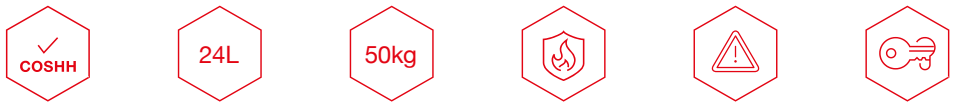

COSHH compliant | Sump capacity | UDL per shelf | Fire resistant | Safety signage | Cam lock

Product specifications

Weight	21kg
Colour	Traffic yellow: RAL 1023
Suitable for	Indoor storage of flammables or chemicals
Finished coating	Powder coated
Material & thickness	0.9mm steel
Quantity of keys	2 keys
How are castors fitted?	Not applicable
Other sizes available	8 other sizes
Ventilation	No
Qty of shelves as standard	1 shelf

Dimensions - External dimensions includes protrusions

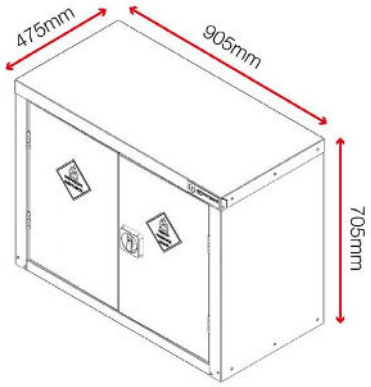

Optional extras - Contact Armorgard to find out more



Stand HCS2



SafeStor shelf

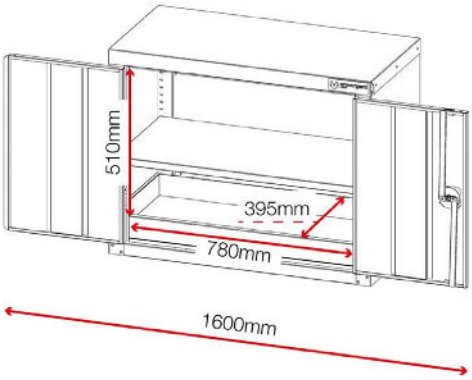

Disclaimer: all dimensions and weights are approximate