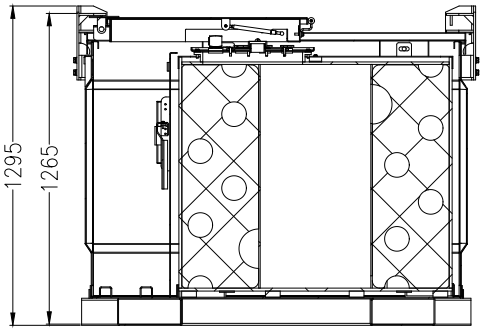

SECTION A-A

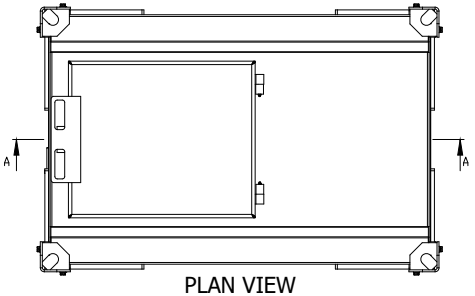

PLAN VIEW

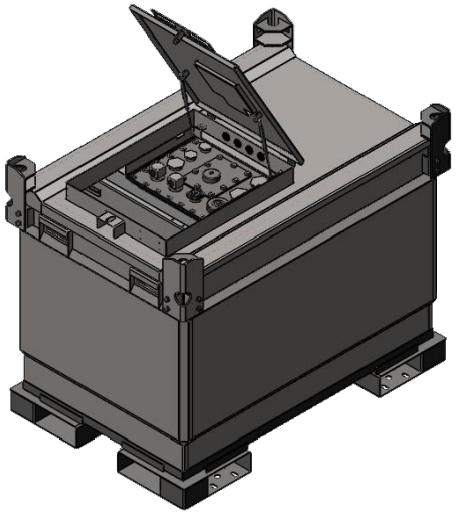

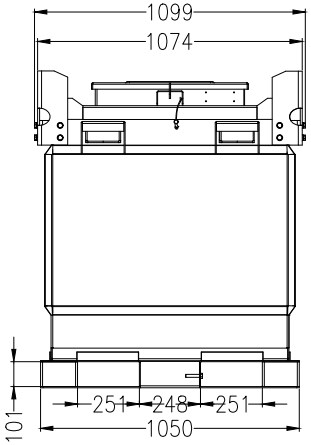

FRONT VIEW

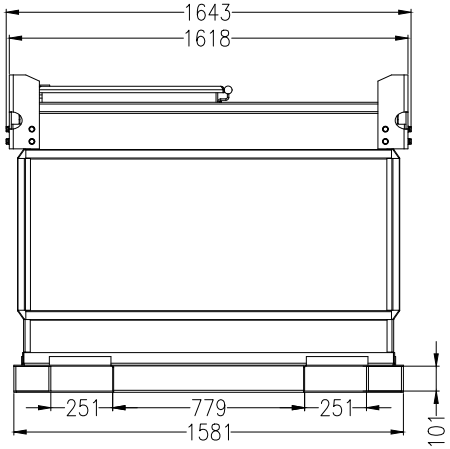

ELEVATION VIEW

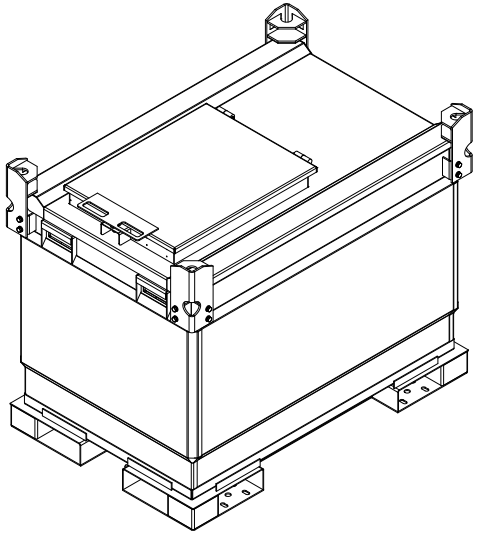

ISOMETRIC VIEW

GENERAL NOTES

1. ALL DIMENSIONS ARE IN MM UNLESS OTHERWISE SPECIFIED.
2. UNLESS OTHERWISE INDICATED, NOZZLE PROJECTIONS ARE MEASURED FROM TANK CENTERLINE.
3. ALL STEEL MATERIAL ARE ASTM A36/EN 10025 S235/IS2062/Q235 (OUTER SHELL), FITTING PLATE SS-304.
4. INNER TANK MATERIAL WILL BE HIGH DENSITY POLYETHYLENE (HDPE)
5. BEFORE SHIPPING, THE TANK MUST BE INTERNALLY CLEANED, DRAINED & DRIED.
6. UNLESS OTHERWISE SPECIFIED, THE FILLET WELD THROAT SIZE FOR NON PRESSURE PARTS TO BE 0.7 TIMES OF SMALLER THICKNESS
7. ALL SHARP CORNERS SHOULD BE ROUNDED OR CHAMFERED.

DESIGN FEATURES

1. BUNDED DEF/Adblue TANK.
2. FORKLIFT POCKETS ARE TO ALLOW EASY AND SAFE HANDLING.
3. DESIGNED TO STACK INSIDE SHIPPING CONTAINERS AND ACROSS TRUCK BEDS PROVIDING ECONOMICAL TRANSPORTATION.
4. UNIQUE CORNERS FOR EXTRA STRENGTH.
5. PROVISION FOR PUMPS AS WELL AS FEED AND RETURN CONNECTIONS FOR GENERATOR USE WITH PROVISIONS FOR ADDITIONAL FEED RETURNS FOR MULTIPLE USE.
6. BUNDED OUTER TANK CAPACITY 110% OF VOLUME AND REMOVABLE INNER TANK FOR MAINTENANCE/ACCESS.
7. SECURE EFFICIENT DESIGN: EASILY STACKED 2 HIGH WHEN FULL, 3 HIGH WHEN EMPTY.
8. SPACE EFFICIENT DESIGN: EASILY STACKED 2 HIGH WHEN FULL, 3 HIGH WHEN EMPTY.
9. PAINTED WITH POWDER COATED PAINT SYSTEM.
10. GALVANIZED CAGE FOR PLASTIC TANK
11. PICKLING AND PASSIVATION FOR FITTING PLATE

DESIGN DATA

DESIGN STANDARD	AS PER DYMAC STANDARD DRAWING
DESIGN PRESSURE	ATMOSPHERIC (14.5 PSI)
DESIGN TEMP.	50° C.
CAPACITY	800L
SAFE FILL VOLUME	760L
MATERIAL OF CONSTRUCTION	ASTM A36/EN 10025 S235/IS2062/Q235 (OUTER SHELL), HDPE (PRIMARY TANK), SS-304 FITTING PLATE
TYPE	RECTANGULAR, DOUBLE WALL, BUNDED, COMPARTMENT
PRIMARY TANK SIZE	1073 mm(L) x 822 mm (W) x 908 mm(H)
EXTERNAL TANK SIZE	1643 mm (L) x 1099 mm(W) x 1295 mm (H)
BAFFLE THICKNESS	6MM HDPE
PRIMARY WALL THICKNESS	12 MM ALL OVER
EXTERNAL WALL THICKNESS	4MM BASE; 3MM SIDE WALLS
PRESSURE TEST	PRIMARY TANK-BY WATER, 2.1 PSI/15 KPA FOR 20 MINIUTE EXTERNAL TANK FILLED WITH WATER FOR 20 MINIUTE

WEIGHTS IN kg.

EMPTY CONDITION (WITHOUT INSULATION)	OPERATING CONDITION (WITHOUT INSULATION)	HYDROTEST CONDITION (WITHOUT INSULATION)
512	1338	1296

NOTE: THE WEIGHTS INCLUDE THE WEIGHT OF INNER POLY PLASTIC TANK

REV.	DESCRIPTION	DATE	CHECKED	APPROVED	REMARKS
0	ISSUED FOR MANUFACTURING	28.03.2025	28.03.2025	28.03.2025	

THIS DRAWING AND THE COPYRIGHT THEREIN IS THE PROPERTY OF DYMAC GLOBAL. IT MAY NOT BE COPIED WHOLLY OR IN PART AND IT MAY NOT BE LOANED OR DISCLOSED TO OTHERS WITHOUT THE PRIOR WRITTEN CONSENT OF DYMAC GLOBAL

DyMac GLOBAL

NOTE:
Unless Otherwise Specified:
Dimensions are in mm
TOLERANCES:
≤100 ± 2
≤1000 ± 3
ANG ± 0.5°

PROJECT TITLE: **ACV-DEF- 800L**

SHEET TITLE: **ACV-DEF-800L SALES GA**

PREPARED:	D.K	DATE:	28-03-2025
CHECKED:	G.R	PO. NO:	NA
APPROVED:	M.L	SCALE:	NTS
PROJECT NO.:	ACV-DEF-800L	REV.:	00
DWG. NO.:	DG-ACV-DEF-800L-SGA	SHEET NO.:	01 OF 01

A4