ESA121

Electric Pedestrian Stacker 1.2 ton



Let's grow together

- Modern, compact, robust, reliable, multipurpose stacker equipped with "plug and play" solutions
- H beam mast with two side cylinders for improved stability and visibility
- Faster lifting and lowering speeds delivering higher stacking performance and efficiency
- User-friendly cover with document, objects and cup pocket and optional USB port to charge any device
- Both AGM and lithium batteries available to suit different needs
- Integrated charger as standard offering charging convenience
- Market-proven drive unit for reliability assurance
- Mono mast and duplex mast in fork and straddle configurations to meet various needs

CE

Manufacturer			EP		
Model designation			ESA121	ESA121-M	ESA121-D
Drive			Electric	Electric	Electric
Load capacity	Q	kg	1200	1200	1200
Load center distance	c	mm	600	600	600
Service weight		kg	700	490	826
Retracted mast height	h1	mm	1995	1951	2425
Lift height	h3	mm	2930	1530	3730
Length to face of forks	l2	mm	610	592	650
Overall width	b1/b2	mm	826	826	1156/1232/1308/1384
Fork dimensions	s/e/l	mm	60/170/1150	60/170/1150	40/100/1070
Turning radius	Wa	mm	1480	1452	1475
Max. gradeability, laden/unladen		%	3/10	3/10	3/10
Travel speed, laden/unladen		km/h	4.0/4.5	4.0/4.5	4.0/4.5
Lifting speed, laden/unladen		m/s	0.15/0.24	0.15/0.25	0.15/0.24
Lowering speed, laden/unladen		m/s	0.21/0.20	0.19/0.14	0.2/0.21
Battery voltage/nominal capacity		V/Ah	24/105	24/105	24/105

EP EQUIPMENT CO.,LTD
www.ep-equipment.com

V2409.02

Mono-mast option ESA121-M

The ESA121 can be fitted with a mono mast and lift goods up to 1953mm. It’ s ideal for stacking pallets in indoor spaces with low ceilings and containers thanks to its free lift height.



Straddle option ESA121-D

The ESA121 offers a straddle version and its straddle legs are flexibly and easily adjusted with 4 widths from narrow to wide. With its adjustable and stable straddle legs, the ESA121 can lift multiple pallets at ease.



FEATURE

Improved mast offering stable operation and good visibility

Safety it a top priority. The structure of the ESA121 is common as heavy duty stackers: two side lifting cylinders grant an excellent visibility and the H-beam mast ensures a robust and rigid structure that grant less frame torsion when carrying heavier loads. These offer the best residual capacity (800kg at 3600mm elevation) and the higher elevation (4100mm) in it' s class.



Higher lifting and lowering performance for productivity boost

Compared to the ES12-12ES, the lifting power of the ESA121 is improved from 2.2kW to 3.0kW, which naturally improves the lifting and lowering speeds and increase turnover efficiency. Soft landing fork is one of the standard feature, providing low noise and perfect handling of fragile loads and the automatic speed reduction when lifting up to top is available as an option for safety assurance.



Maintenance-free battery with integrated charger

The ESA121 offers options of AGM battery and lithium battery, both of which are maintenance-free, to fulfill various needs. It comes with a standard integrated charger for charging convenience.

User-centered design improving daily convenience

The new cover is designed around user-centered advantages to offer maximum convenience for daily use. The operator is allowed to take paper documents and cups even charge electronic devices on the go.



Electric Pedestrian Stacker (Duplex mast / Mono mast / Straddle) 1200kg

ESA121 / ESA121-M / ESA121-D

Distinguishing mark	1.1	Manufacturer			EP	EP	EP
	1.2	Model designation			ESA121	ESA121-M	ESA121-D
	1.3	Drive			Electric	Electric	Electric
	1.4	Operator type			Pedestrian	Pedestrian	Pedestrian
	1.5	Load capacity	Q	kg	1200	1200	1200
	1.5.1	Load capacity，load with mast lift	Q1	kg	—	—	—
	1.5.2	Load capacity，load with support arm lift	Q2	kg	—	—	—
	1.6	Load center distance	c	mm	600	600	600
Service weight	1.8	Load distance，centre of drive axle to fork	x	mm	808	808	773
	1.9	Wheelbase	y	mm	1230	1210	1235
	2.1	Service weight		kg	700	490	820
Tyres/chassis	2.2	Axle loading, laden front/rear		kg	720/1180	560/1130	770/1250
	2.3	Axle loading, unladen front/rear		kg	520/180	360/130	600/220
	3.1	Tyre type			Polyurethane	Polyurethane	Polyurethane
	3.2.1	Tyre size, front		mm	Ø214×70	Ø214×70	Ø214×70
	3.3.1	Tyre size, rear		mm	Ø80×61	Ø80×61	Φ102x50
	3.4	Additional wheels (castor wheels)		mm	Ø130×55	Ø130×55	Ø130×55
	3.5	Wheels, number front/rear (x=drive wheels)		mm	1x， 1/4	1x， 1/4	1x， 1/4
Dimensions	3.6.1	Tread width, front	b10	mm	543	543	543
	3.7.1	Tread width, rear	b11	mm	400	400	1070/1146/1222/1298
	4.0	Max. Lift Height	H	mm	—	—	—
	4.2	Retracted mast height	h1	mm	1995	1951	2425
	4.3	Free lift	h2	mm	—	1530	—
	4.4	Lift height	h3	mm	2930	1530	3730
	4.5	Height, mast extended	h4	mm	3460	1991	4700
	4.6	Initial lift	h5	mm	—	—	—
	4.9	Height of tiller handle in drive position min./max.	h14	mm	760/1140	760/1140	760/1140
	4.10	Height of wheel arms	h8	mm	—	—	100
	4.15	Lowered height	h13	mm	90	90	63
	4.19	Overall length	l1	mm	1760	1742	1720
	4.20	Length to face of forks	l2	mm	610	592	650
	4.21	Overall width	b1/b2	mm	826	826	1156/1232/1308/1384
	4.22	Fork dimensions	s/e/l	mm	60/170/1150	60/170/1150	40/100/1070
	4.24	Fork carriage width	b3	mm	680	700	826
	4.25	Distance between fork-arms	b5	mm	570	570	200~780
	4.26	Distance between wheel arms/loading surfaces	b4	mm	—	—	991/1067/1143/1219
	4.31	Ground clearance, laden, below mast	m1	mm	—	—	30
	4.32	Ground clearance, center of wheelbase	m2	mm	23	23	40
	4.34.1	Aisle width for pallets 1000×1200 crossways	Ast	mm	2310	2282	2375
	4.34.2	Aisle width for pallets 800×1200 lengthways	Ast	mm	2240	2212	2263
	4.35	Turning radius	Wa	mm	1480	1452	1475
Performance data	5.1	Travel speed, laden/unladen		km/ h	4.0/4.5	4.0/4.5	4.0/4.5
	5.2	Lifting speed, laden/unladen		m/s	0.15/0.24	0.15/0.25	0.15/0.24
	5.3	Lowering speed, laden/unladen		m/s	0.21/0.20	0.19/0.14	0.2/0.21
	5.8	Max. gradeability, laden/unladen		%	3/10	3/10	3/10
	5.10	Service brake			Electromagnetic	Electromagnetic	Electromagnetic
Electric-engine	6.1	Drive motor rating S2 60 min		kW	0.65	0.65	0.65
	6.2	Lift motor rating at S3 15%		kW	3.0	3.0	3.0
	6.4	Battery voltage/nominal capacity		V/Ah	24V/105Ah	24V/105Ah	24V/105Ah
	6.5	Battery weight		kg	61	61	61
Addition data	8.1	Type of drive control			DC	DC	DC
	10.5	Steering design			Mechanical	Mechanical	Mechanical
	10.7	Sound pressure level at the driver's ear		dB(A)	74	74	74

If there are improvements of technical parameters or configurations, no further notice will be given.
The diagram shown may contain non-standard configurations.

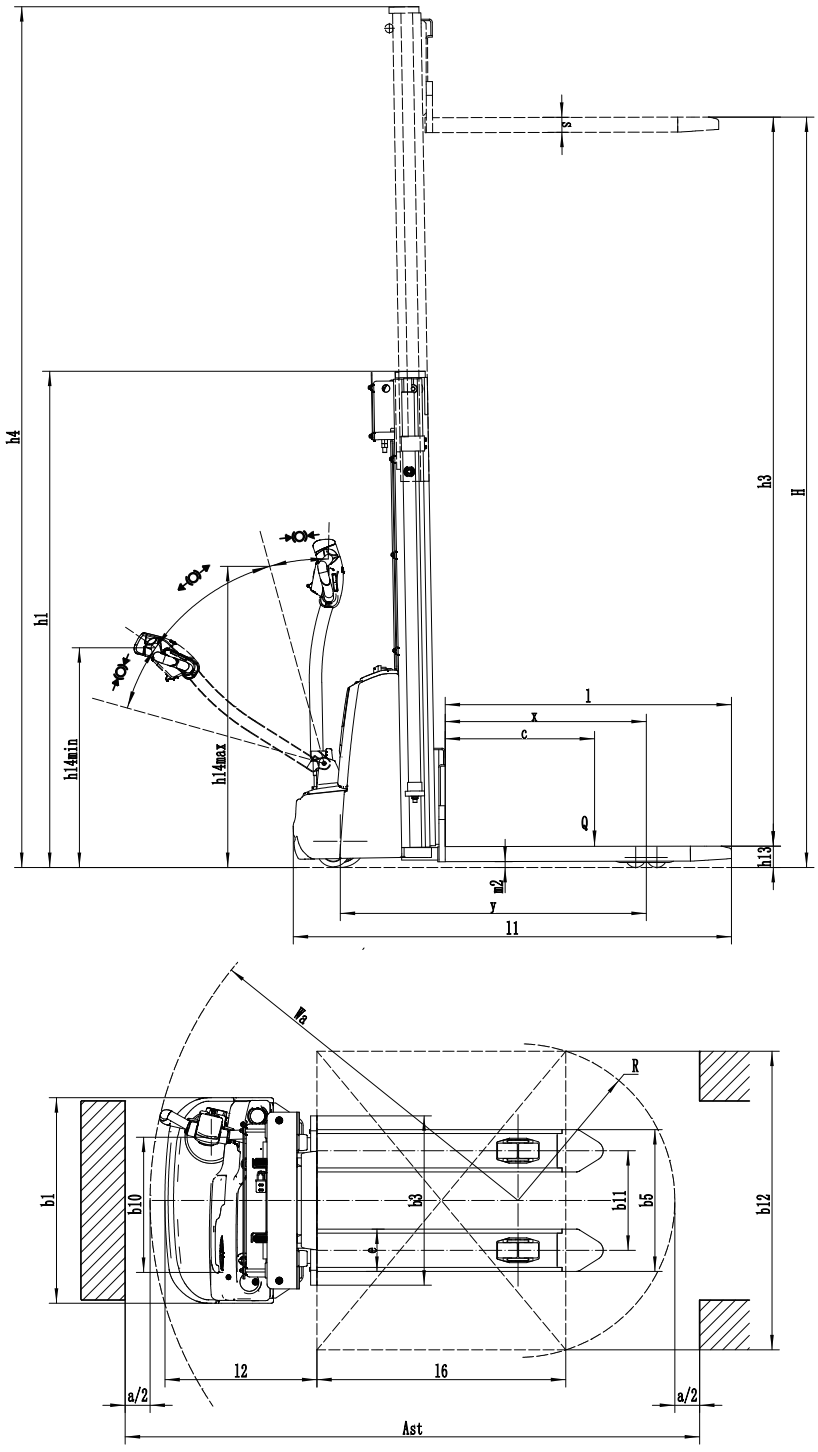

ESA121 Mast Option

Mast types	Lift height h3+h13(mm)	Height, mast lowered h1(mm)	Free lift h2(mm)	Height, mast extended h4(mm)
2-Standard Mast	2513	1745	—	2960
	2713	1845	—	3160
	3013	1995	—	3460
	3313	2145	—	3760
	3613	2295	—	4060
	3813	2395	—	4260
	3913	2445	—	4360
	4113	2545	—	4560

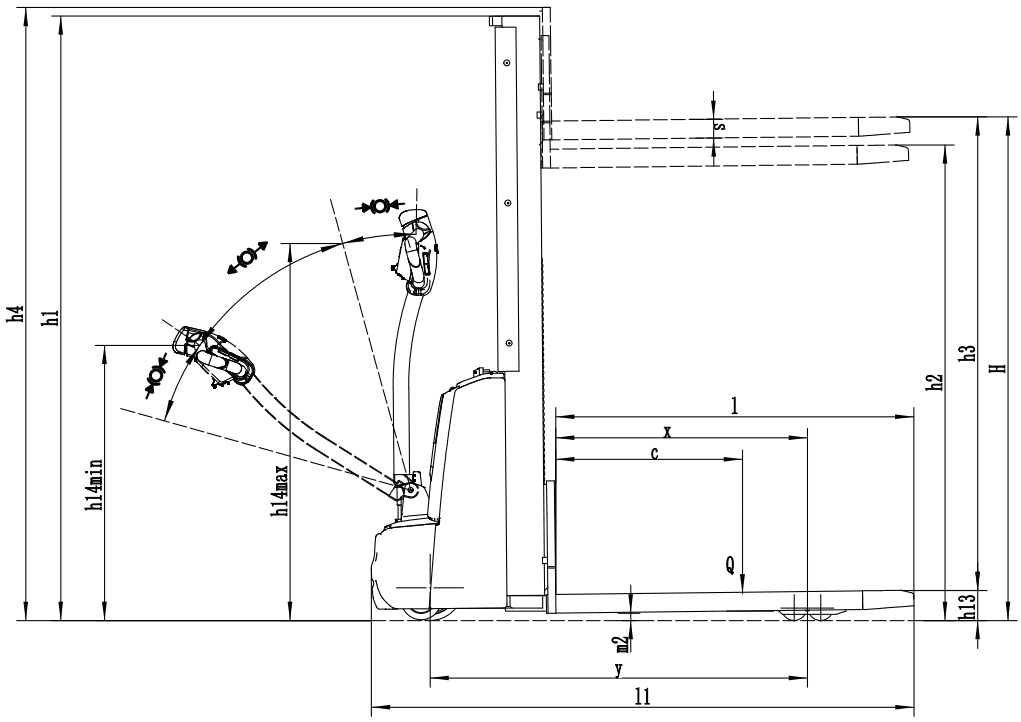

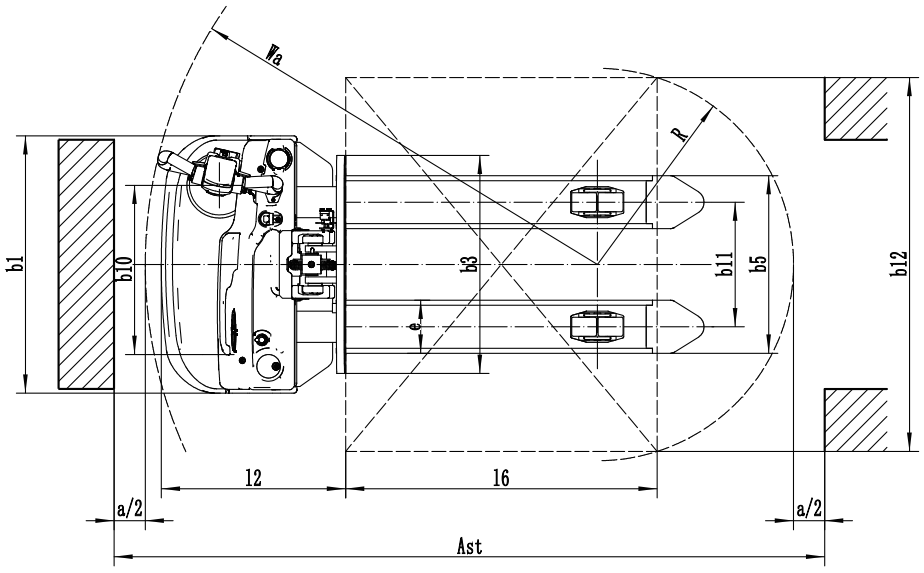

ESA121-M Mast Option

Mast types	Lift height h3+h13(mm)	Height, mast lowered h1(mm)	Free lift h2(mm)	Height, mast extended h4(mm)
Simplex Mast	1613	1951	1530	1991
	1953	2291	1860	2336

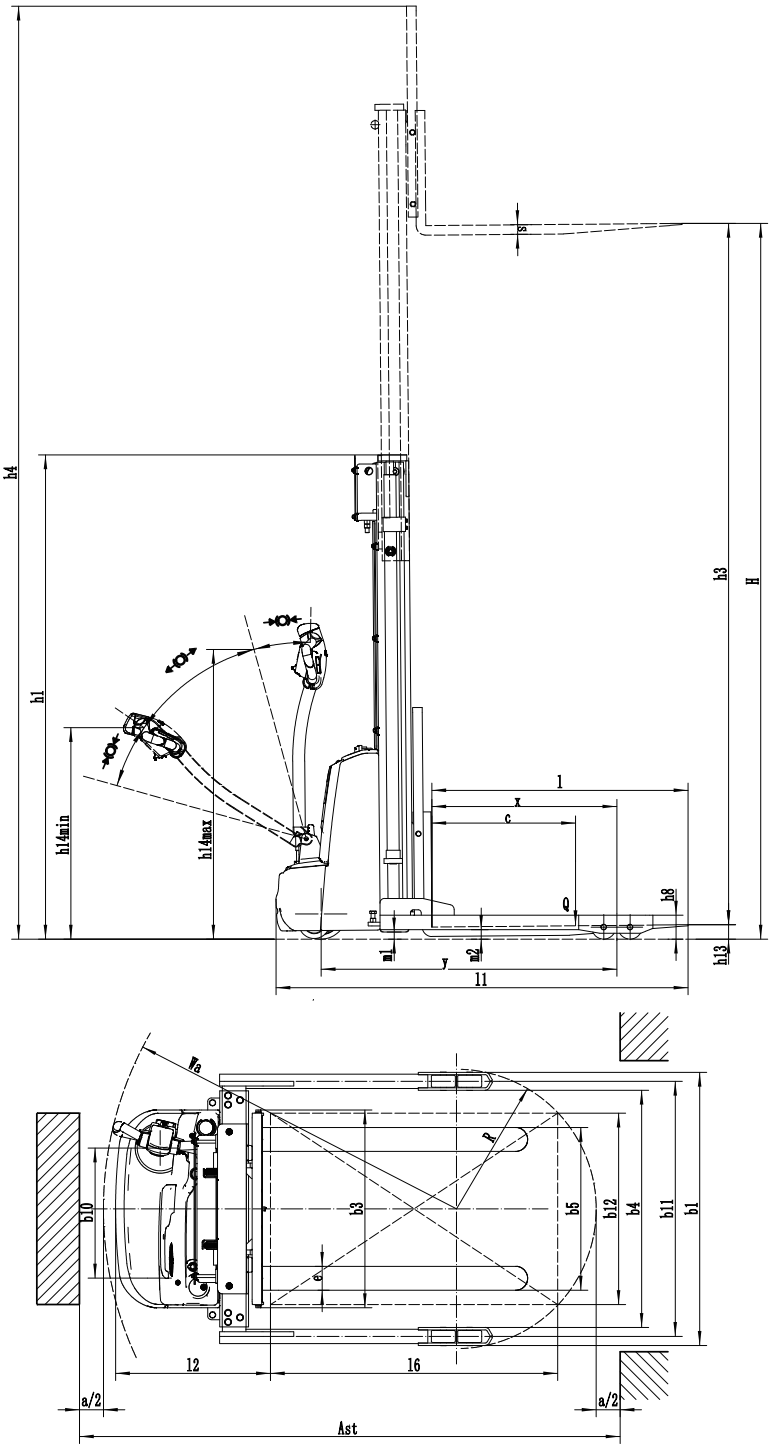

ESA121-D Mast Option

Mast types	Lift height h3+h13(mm)	Height, mast lowered h1(mm)	Free lift h2(mm)	Height, mast extended h4(mm)
2-Standard Mast	2480	1775	—	3400
	2680	1875	—	3600
	2980	2025	—	3900
	3280	2175	—	4200
	3580	2325	—	4500
	3780	2425	—	4700
	3880	2475	—	4800
	4080	2575	—	5000

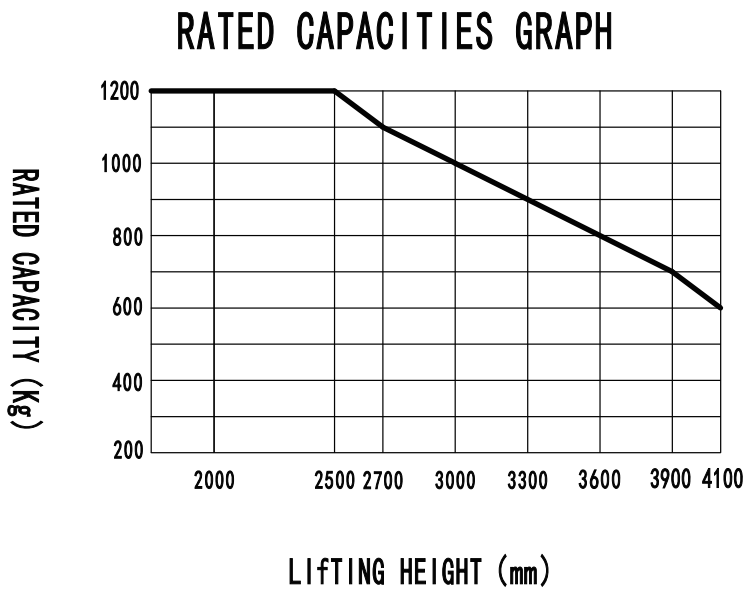

ESA121 Option

No.	Optional items	ESA121
1.1	Fork dimension	●570*1150○685*1150○570*1000 ○685*1000○570*1220○685*1220
1.3	Fork lowered height	●90
1.4	Fork carriage width	●680mm○770mm
2.1	Load wheel type	●Double
2.2	Load wheel material	●PU
2.3	Drive wheel material	●PU
2.7	Battery capacity	●105Ah(AGM)○125Ah(AGM)○100Ah(Li-ion)
2.8	Charger	●24V-15A integrated (AGM)○24V-30A integrated(Li-ion)
2.9	Battery indicator	●With time
2.16	handle head type	●Hands big handle head
3.3	Castor wheels	●Yes and not customized
3.16	Turtle speed	●Yes and not customized
3.26	USB Outlets	●No○Yes and not customized
3.27	Automatic lifting speed reduction	●No○Yes and not customized
Note:	●Standard ○ Optional - Inconformity	

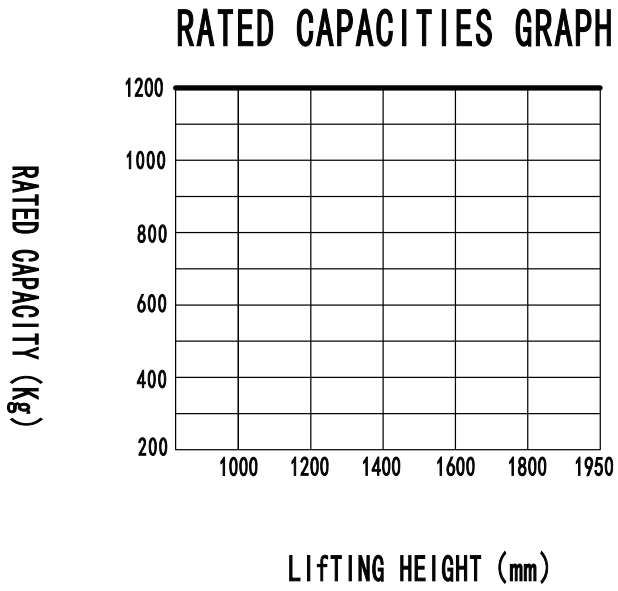

ESA121-M Option

No.	Optional items	ESA121-M
1.1	Fork dimension	●570*1150○685*1150○570*1000 ○685*1000○570*1220○685*1220
1.3	Fork lowered height	●90
1.4	Fork carriage width	●700mm○800mm
2.1	Load wheel type	●Double
2.2	Load wheel material	●PU
2.3	Drive wheel material	●PU
2.7	Battery capacity	●105Ah(AGM)○125Ah(AGM)○100Ah(Li-ion)
2.8	Charger	●24V-15A integrated (AGM)○24V-30A integrated (Li-ion)
2.9	Battery indicator	●With time
2.16	handle head type	●Hands big handle head
3.3	Castor wheels	●Yes and not customized
3.16	Turtle speed	●Yes and not customized
3.26	USB outlet	●No○Yes and not customized
3.27	Automatic lifting speed reduction	●No○Yes and not customized
Note:	●Standard ○ Optional - Inconformity	

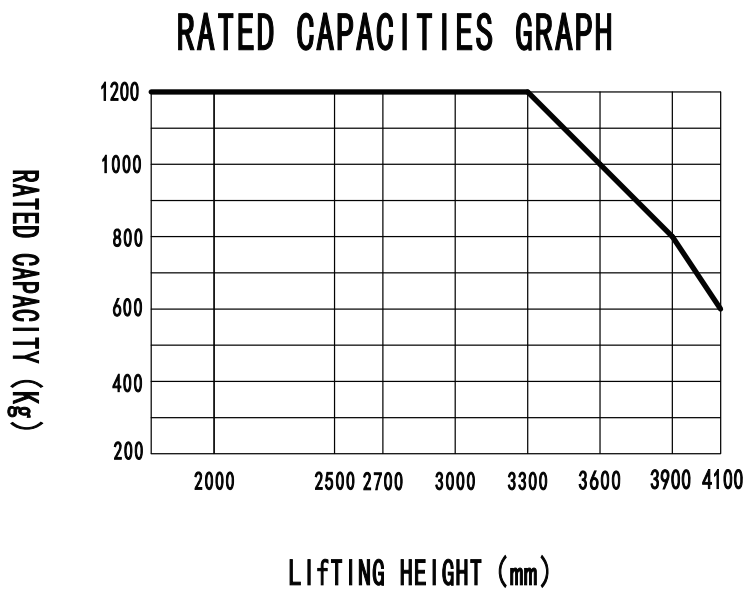

ESA121-D Option

No.	Optional items	ESA121-D
1.1	Fork dimension	●900*600、2A、100*40*1070 ○900*600、2A、100*40*1150○900*600、2A、100*40*1220
1.3	Fork lowered height	●63
1.4	Fork carriage width	●826mm
1.5	Load backrest height	●917mm(36in)
2.1	Load wheel type	●Double
2.2	Load wheel material	●PU
2.3	Drive wheel material	●PU
2.7	Battery capacity	●105Ah(AGM)○125Ah(AGM)○100Ah(Li-ion)
2.8	Charger	●24V-15A integrated (AGM)○24V-30A integrated(Li-ion)
2.9	Battery indicator	●With time
2.16	handle head type	●Hands big handle head
3.3	Castor wheels	●Yes and not customized
3.16	Turtle speed	●Yes and not customized
3.26	USB Outlet	●No○Yes and not customized
3.27	Automatic lifting speed reduction	●No○Yes and not customized

Note: ●Standard ○ Optional - Inconformity