URW-1006+
(10.0t x 3.0m)

- Total width 2.0m
- Max. working radius 21.0m (24.3m with fly jib)
- Max working height 22.8m (30.7m with fly jib)
- Diesel powered and optional integrated mains electric
- Zero length increase with electric option
- Radio remote control with feedback display as standard
- Working area limitation (optional)
- High resolution colour SLI display
- Stowable hydraulic fly jib
- Slew limitation (optional)
- Intelligent throttle activation for economy and ecology



Optional Variable Footprint safe load indicator

The UNIC URW-1006+ offers an unrivalled 10 tonnes of lifting power, making it the world's largest capacity mini spider crane.

Boasting up to 30.7 metres of lifting height and a 24.3 metre working radius, This 10 tonne spider crane features a newly revised load chart and has a unique pick and carry function, which enables it to travel with loads up to 1.5 tonnes.

The UNIC URW-1006+ outriggers can be configured to provide maximum stability when lifting on uneven surfaces thanks to their full interlocking safety system. Furthermore, an innovative safe load indicator with a high resolution, colour LCD display acts as an integrated safety feature to prevent the crane operating outside of its safe working range, for complete peace of mind.

This model includes a radio remote control with feedback, displaying all of the information that can be seen on the main SLI display, including safe working load, actual load, radius and boom length. In addition to this newly introduced innovation, a forward-facing camera displayed on the safe load indicator screen is now available as an optional extra to improve visibility while driving.

As with all the cranes available in the UNIC mini spider crane range, an excellent after care service is provided with any purchase. Our technical team offer maintenance, repairs, servicing and testing.

RADIO REMOTE CONTROL WITH FEEDBACK DISPLAY



Radio remote control with digital feedback



Shockless damping system for smooth stop when operated via remote control

MINI SPIDER CRANE

UNIC CRANES EUROPE

DIMENSIONS

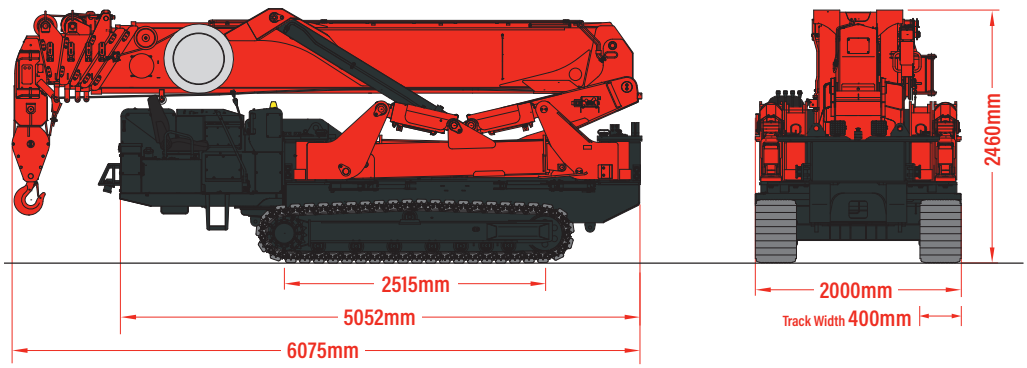





Standard high resolution colour SLI



Engine information screen



CRANE SPECIFICATIONS

Crane capacity	capacity:	10.0t x 3.0m
Max working radius	max:	21.9m (24.3m with fly jib)
Max lifting height	approx:	22.8m 27.6m with first stage fly jib 30.7m with second stage fly jib
Rope length	max:	30m (4 fall), 62m (2 fall), 128m (1 fall)
Dimensions	folded:	6075mm (l) x 2000mm (b) x 2460mm (h)
Weight	approx:	14000kg including electric pack and hydraulic fly jib
Point loadings	Due to the many variables involved, point loadings are only available on request	
Hook speed	approx:	10 - (16) m/min at 4th layer with 4-part line
Telescopic system	boom length: telescoping speed: boom type:	5.75 - 23.10m 17.35m/88 seconds 6 section hydraulically telescoping boom, hexagonal box construction
Derricking angle/speed	approx:	0 - 80˚/44.0 seconds
Slewing angle/speed	approx:	360˚ (continuous) 1.3min rpm
Hydraulic outriggers	position: vertical: horizontal:	A double acting hydraulic cylinder with link system A double acting hydraulic cylinder, direct pushing type connected with hydraulic locking device A double acting hydraulic cylinder, direct pushing type connected with hydraulic locking device
Traction system	drive: travel speed: gradeability: track ground length: track ground pressure: track width:	hydrostatic 2-speed, stepless forward and reverse 0 - 2.6km/h ±20˚ (vertical) 20˚ (traverse) 2515mm 68.2kPa (0.70kg/cm^2) 400mm (city pad rubber on steel)
Engine	manufacturer: fuel: rated output: starting method: tank capacity:	Kubota Stage V diesel (electric dual power option) 31.2kW (42.42PS) / 2200min rpm electric 83 litres
Electric motor	power: voltage:	11kW 400v AC 50/60hz
Standard equipment	computer controlled moment limiter (safe load indicator) with high resolution colour display, multi-function operation by radio remote control with digital feedback, overwinding alarm, computer controlled intelligent voice warning system, intelligent throttle activation, automatic hook stow, overload warning alarms and lamps, 1000kg capacity hydraulic fly jib with single part line	
Optional equipment	2 fall hook block, mains electric dual power (400v), slew limitation, data logging, forward facing camera, variable footprint option, working area limitation	



URW-1006+
(10.0t x 3.0m)

WORKING RANGE - OUTRIGGERS SET TO MAX

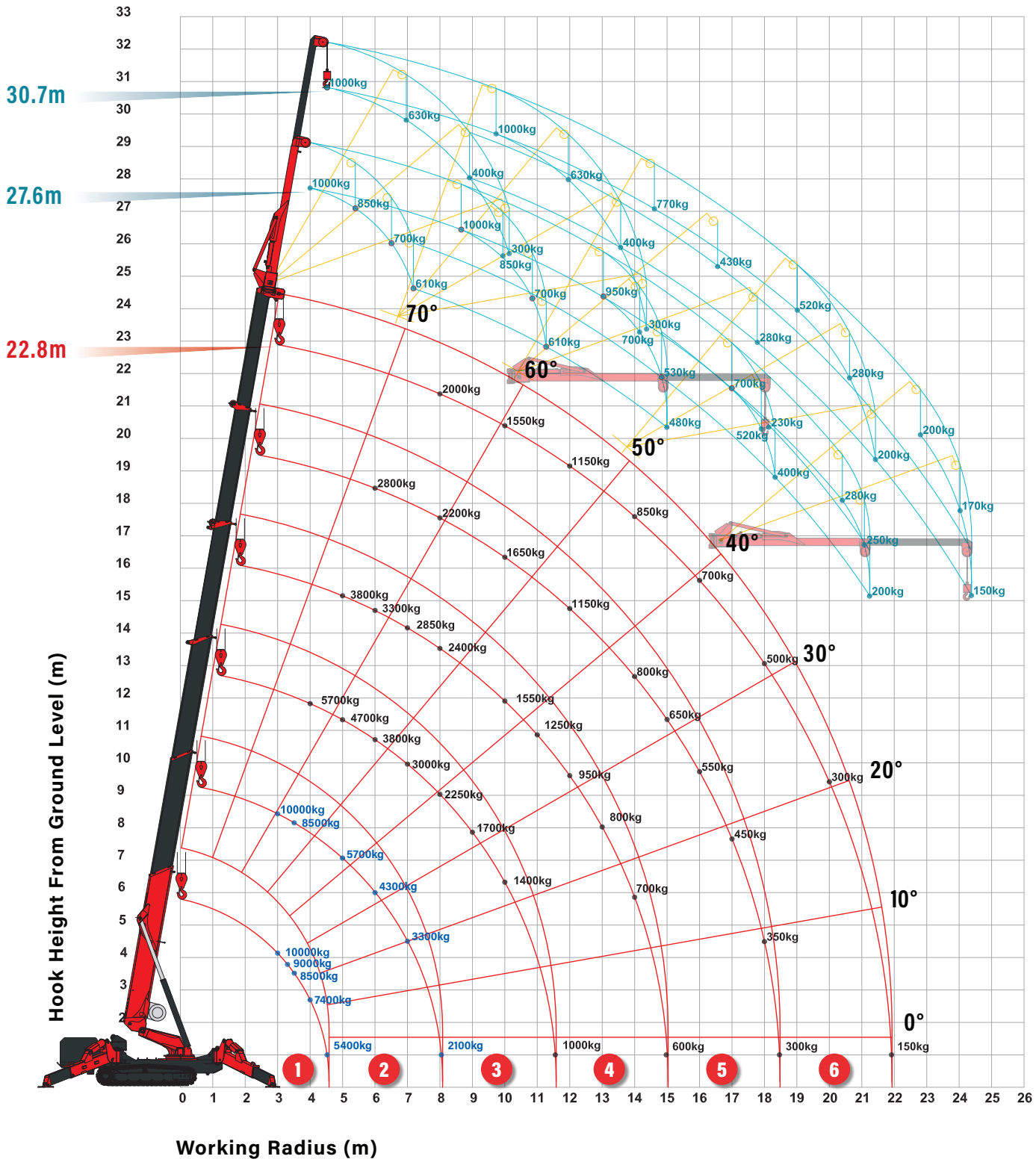

MINI SPIDER CRANE

UNIC CRANES EUROPE

OUTRIGGER POSITIONS & HOOK FALLS

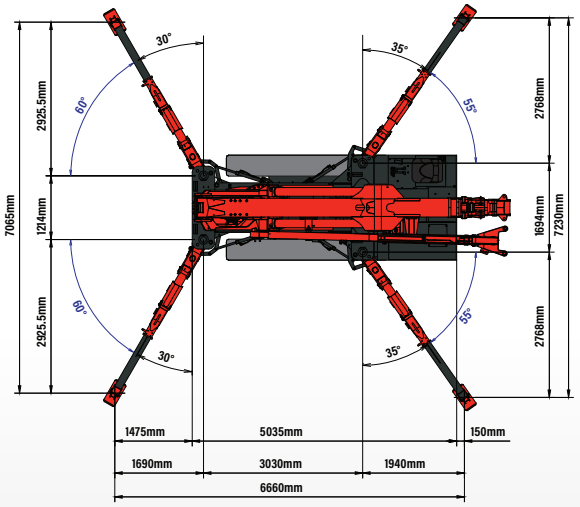

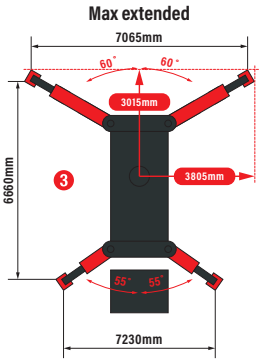

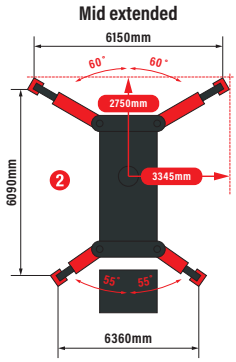

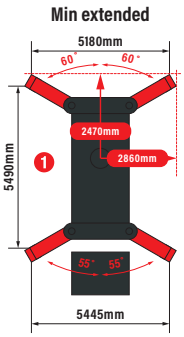

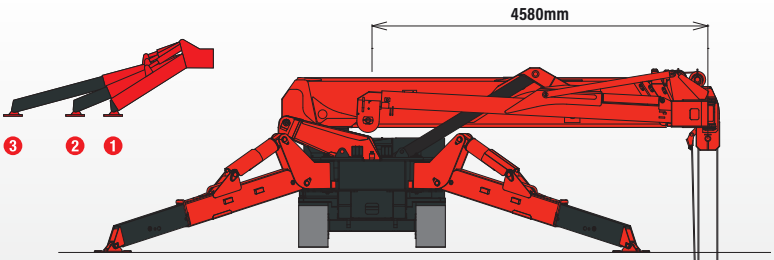

RATED LOADS

FIRST STAGE EXTENDED 5.8M BOOM LENGTH

Working radius		m	up to 2.5	3.0	3.3	3.5	4.0	4.1	4.58
Outrigger	Max-extended	kg	10,000	10,000	9,000	8,500	7,400	7,000	5,400
	Mid-extended	kg	10,000	10,000	9,000	8,000	7,000	6,500	5,200
	Min-extended	kg	10,000	10,000	8,800	7,600	6,300	6,000	5,000

SECOND STAGE EXTENDED 5.8 - 9.2M BOOM LENGTH

Working radius		m	up to 2.5	3.0	3.5	4.0	4.2	5.0	6.0	7.0	8.08
Outrigger	Max-extended	kg	10,000	10,000	8,500	7,400	7,000	5,700	4,300	3,300	2,100
	Mid-extended	kg	10,000	10,000	8,000	7,000	6,500	5,300	3,900	2,900	1,800
	Min-extended	kg	10,000	10,000	7,600	6,300	6,000	4,500	3,200	2,300	1,450

THIRD STAGE EXTENDED 9.2 - 12.7M BOOM LENGTH

Working radius		m	up to 4.0	5.0	6.0	7.0	8.0	9.0	10.0	11.58
Outrigger	Max-extended	kg	5,700	4,700	3,800	3,000	2,250	1,700	1,400	1,000
	Mid-extended	kg	5,700	4,700	3,800	2,850	2,050	1,550	1,150	800
	Min-extended	kg	5,700	4,500	3,450	2,450	1,700	1,200	850	470

FOURTH STAGE EXTENDED 12.7 - 16.1M BOOM LENGTH

Working radius		m	up to 5.0	6.0	7.0	8.0	10.0	11.0	12.0	13.0	14.0	15.03
Outrigger	Max-extended	kg	3,800	3,300	2,850	2,400	1,550	1,250	950	800	700	600
	Mid-extended	kg	3,800	3,300	2,850	2,400	1,550	1,150	880	700	550	400
	Min-extended	kg	3,800	3,200	2,600	2,060	1,160	850	600	420	250	100

FIFTH STAGE EXTENDED 16.1 - 19.5M BOOM LENGTH

Working radius		m	up to 6.0	8.0	10.0	12.0	14.0	15.0	16.0	17.0	18.0	18.48
Outrigger	Max-extended	kg	2,800	2,200	1,650	1,150	800	650	550	450	350	300
	Mid-extended	kg	2,800	2,200	1,650	1,150	710	560	430	310	210	160
	Min-extended	kg	2,800	2,000	1,330	810	470	340	210	70	-	-

SIXTH STAGE EXTENDED 19.5 - 22.8M BOOM LENGTH

Working radius		m	up to 8.0	10.0	12.0	14.0	16.0	18.0	20.0	21.93
Outrigger	Max-extended	kg	2,000	1,550	1,150	850	700	500	300	150
	Mid-extended	kg	2,000	1,550	1,150	780	470	230	80	-
	Min-extended	kg	2,000	1,450	950	580	320	110	-	-





4 Fall
30.00m
10,000kg
max

2 Fall
62.00m
5,000kg
max

1 Fall
128.00m
2,000kg
max

URW-1006+
(10.0t x 3.0m)

FLY JIB WORKING RANGE

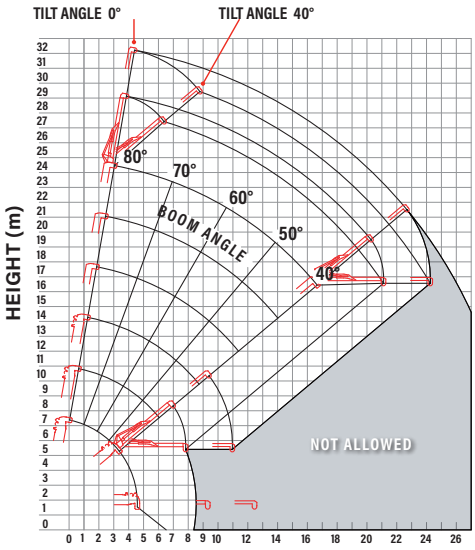

WORKING RADIUS (m) Tilt Angles 0° - 40°
Outriggers extended to maximum and halfway

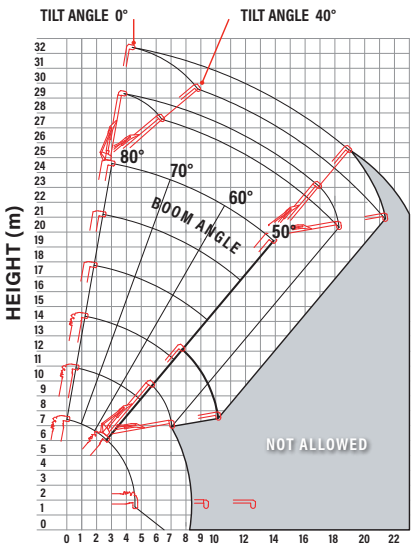

WORKING RADIUS (m) Tilt Angles 0° - 40°
Outriggers extended to minimum

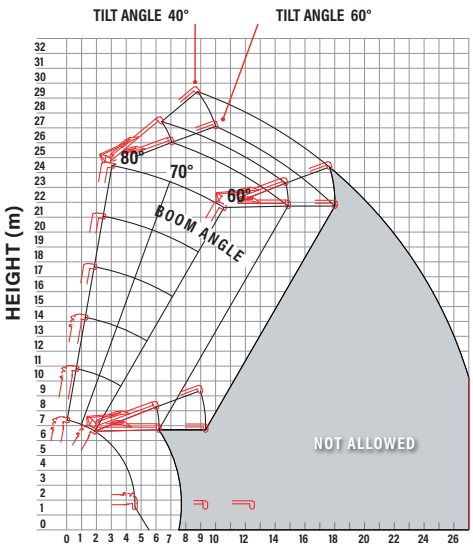

WORKING RADIUS (m) Tilt Angles 40° - 60°
Outriggers extended to maximum, halfway and minimum

Note: The above figures are based on a no-load condition and do not include the deflection of the boom.

FLY JIB NET RATED LOADS (kg) - ANGLE RATED OUTRIGGERS SET TO MAXIMUM

BOOM ANGLE	FLY JIB 1 (4.73m) - TILT ANGLES				FLY JIB 2 (7.87m) - TILT ANGLES			
	0°	20°	40°	60°	0°	20°	40°	60°
80°	1000	850	700	610	1000	630	400	300
70°	1000	850	700	610	1000	630	400	300
60°	950	700	530	480	770	430	280	230
50°	700	520	400		520	280	200	
40°	280	250	200		200	170	150	
30°	NOT ALLOWED				NOT ALLOWED			
20°								
10°								
0°								

FLY JIB NET RATED LOADS (kg) - ANGLE RATED OUTRIGGERS SET TO HALFWAY

BOOM ANGLE	FLY JIB 1 (4.73m) - TILT ANGLES				FLY JIB 2 (7.87m) - TILT ANGLES			
	0°	20°	40°	60°	0°	20°	40°	60°
80°	1000	850	700	610	1000	630	400	300
70°	1000	850	700	610	1000	630	400	300
60°	950	700	530	480	700	430	280	230
50°	420	400	400		350	350	200	
40°	200	200	180		130	130	130	
30°	NOT ALLOWED				NOT ALLOWED			
20°								
10°								
0°								

FLY JIB NET RATED LOADS (kg) - ANGLE RATED OUTRIGGERS SET TO MINIMUM

BOOM ANGLE	FLY JIB 1 (4.73m) - TILT ANGLES				FLY JIB 2 (7.87m) - TILT ANGLES			
	0°	20°	40°	60°	0°	20°	40°	60°
80°	1000	850	700	610	1000	630	400	300
70°	1000	850	700	610	1000	630	400	300
60°	700	600	530	480	600	430	280	230
50°	300	270	220		250	200	200	
40°	NOT ALLOWED				NOT ALLOWED			
30°								
20°								
10°								
0°								







MINI SPIDER CRANE

UNIC CRANES EUROPE

PICK & CARRY WORKING RANGE

OUTRIGGERS FOLDED

Lifting Capacity 750kg
Working Radius 2.5m
Boom Length Boom 1 and 1+2 only



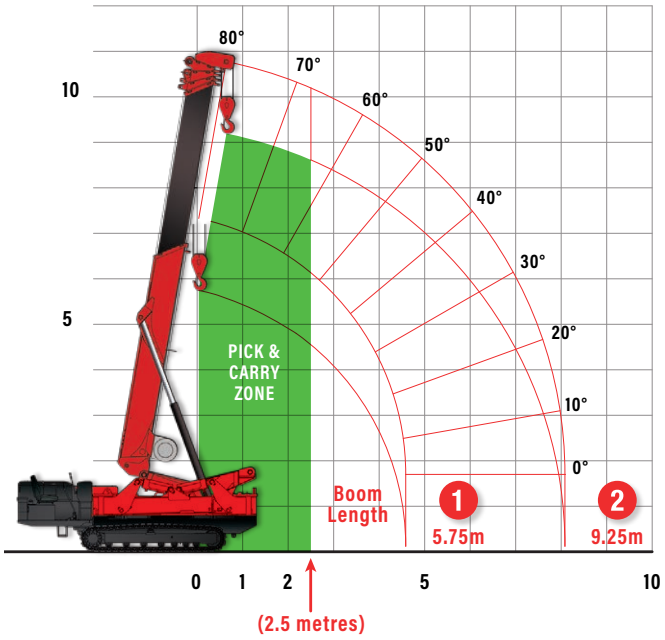

OUTRIGGERS EXTENDED

Lifting Capacity 1,500kg
Working Radius 2.5m
Boom Length Boom 1 and 1+2 only



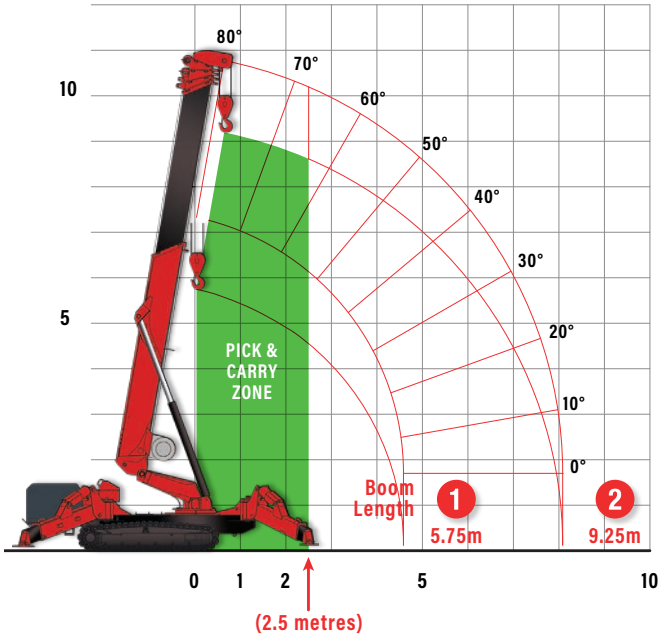

OPTIONAL VARIABLE FOOTPRINT INCLUDING SLEW & HEIGHT LIMITATION

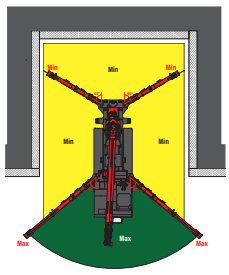

Height Limitation

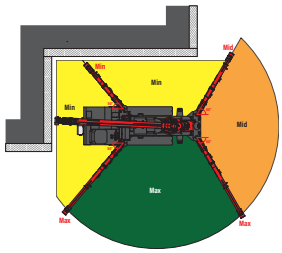

Variable Height Limitation



Slew Limitation

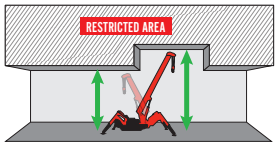

Variable Slew Limitation

