Green Pin® Mooring Bow Shackle BN
Group : G-4863
Part : AMGHMB22
MBL : 40t

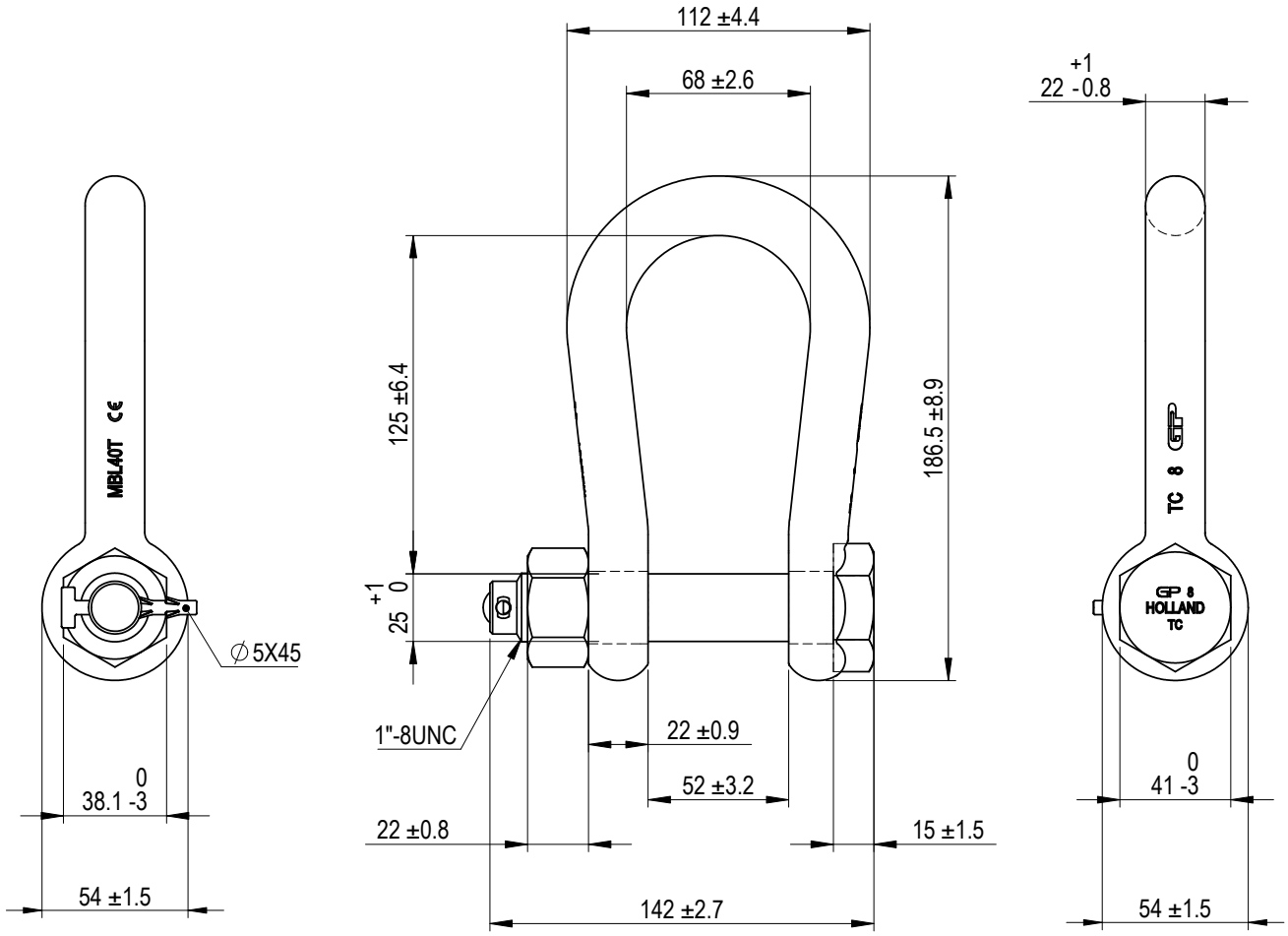

We reserve the right to make amendments on specifications in this drawing without prior notification.

Rev.	Description	Date	Drawn
0	First Issue	2022/6/1	DL

Copyright by Van Beest B.V. moreover this document is the property of Van Beest B.V. This document or any part of it may neither be made known, copied or multiplied, nor used for any purpose other than that for which it is specifically furnished, without the prior written consent of Van Beest B.V.

Green Pin®
P.O. Box 57, 3360 AB Sliedrecht (The Netherlands)
Industrieweg 6, 3361 HJ Sliedrecht
Tel. +31(0)184-413300 www.greenpin.com

Format A4
Scale 1:2.75

Title Green Pin® Mooring Bow Shackle BN
Mooring bow shackle with safety bolt and sunken bolt head

Remark
G-4863
AMGHMB22

Drawing number 6911
Rev. 0