Green Pin® Fishing Dee Shackle FP DSP
Group : G-4139
Part : GPGDVV16DS
WLL : 3.25t

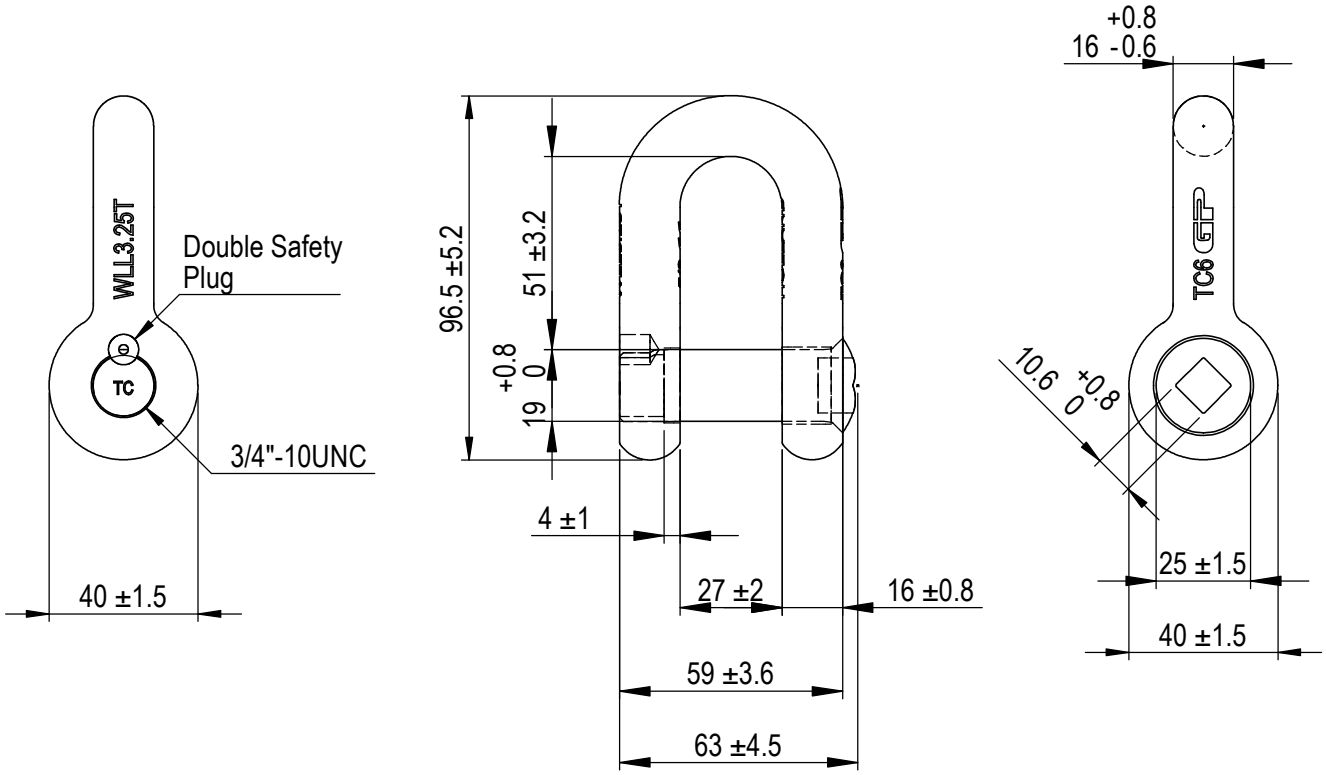

We reserve the right to make amendments on specifications in this drawing without prior notification.

Rev.	Description	Date	Drawn
0	First Issue	2020/11/1	DL

Copyright by Van Beest B.V. moreover this document is the property of Van Beest B.V. This document or any part of it may neither be made known, copied or multiplied, nor used for any purpose other than that for which it is specifically furnished, without the prior written consent of Van Beest B.V.

Green Pin®
P.O. Box 57, 3360 AB Sliedrecht (The Netherlands)
Industrieweg 6, 3361 HJ Sliedrecht
Tel. +31(0)184-413300 www.greenpin.com

Title: Green Pin® Fishing Dee Shackle FP DSP
Dee shackle with square sunken hole screw pin (flush) and double safety plug

Remark: G-4139 GPGDVV16DS

Format: A4
Scale: 1:2

Drawing number: 5216
Rev.: 0