# DSRB S
## Sheave block for rope guidance, equipped with ball bearings



### Technical data DSRB

| Model | Art.-No. | Classification FEM/ISO | Pulling force in kg at deflection 90° | Pulling force in kg at deflection 180° | Rope diameter mm |
|---|---|---|---|---|---|
| **DSRB S 90/4** | 33447103 | 2m/M5 | 700 | 500 | 3-4 |
| **DSRB S 90/6** | 33447413 | 1Dm/M1 | 700 | 500 | 5-6 |
| **DSRB S 145/7** | 33447106 | 1Am/M4 | 1100 | 800 | 7 |
| **DSRB S 185/8** | 33447107 | 2m/M5 | 2300 | 1630 | 8 |
| **DSRB S 270/12** | 33447111 | 2m/M5 | 2500 | 1800 | 9-12 |

All sheaves are available as an individual component on request.

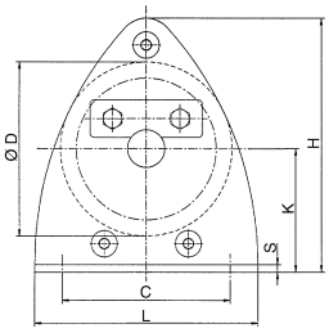


### Dimensions DSRB

| Model | DSRB S 90/4 | DSRB S 90/6 | DSRB S 145/7 | DSRB S 185/8 | DSRB S 270/12 |
|---|---|---|---|---|---|
| B, mm | 85 | 85 | 125 | 138 | 191 |
| C, mm | 90 | 90 | 160 | 195 | 290 |
| Ø D, mm | 90 | 90 | 145 | 185 | 270 |
| Ø D1, mm | 20 | 25 | 25 | 30 | 40 |
| Ø Dm, mm | 80 | 78 | 126 | 160 | 246 |
| E, mm | 62 | 62 | 88 | 106 | 138 |
| H, mm | 134 | 134 | 224 | 273 | 407 |
| K, mm | 65 | 65 | 110 | 135 | 202 |
| L, mm | 120 | 120 | 200 | 245 | 360 |
| Ø M/M1, mm | 9/9 | 9/9 | 11.5/13 | 13.5/15 | 18/20 |
| S, mm | 4 | 6 | 6 | 8 | 10 |

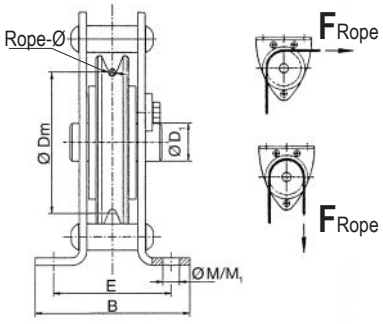


Ex-version on request!

## Standard ropes for manual winches

### According to DIN EN 12385-4

(formerly DIN 3060 resp. DIN 3069)

## INFO

Additional accessories available on request.

| Rope diameter | Breaking load of rope min. kN | Art.-No. Rope length 5 m | Art.-No. Rope length 10 m | Art.-No. Rope length 15 m | Art.-No. Rope length 20 m | Capacity clevis end kg |
|---|---|---|---|---|---|---|
| 4 mm | 10.1 | 33600405 | 33600410 | 33600415 | 33600420 | 500 |
| 5 mm | 15.8 | 33600505 | 33600510 | 33600515 | 33600520 | 1000 |
| 6 mm | 22.8 | 33600605 | 33600610 | 33600615 | 33600620 | 1000 |
| 7 mm | 31.0 | 33600705 | 33600710 | 33600715 | 33600720 | 1000 |