LB
Console-mounted winch

Capacity 150 - 1200 kg

Originally developed as offroad winch the console-mounted winch model LB is used today for a variety of lifting and pulling applications.

Features

- Light weight robust stamped steel housing.
- Spur gear drive for optimal efficiency and comfortable handling.
- Automatic load pressure brake for save holding of the load in any position. An unintentional brake release is prevented.
- All parts are zinc-plated for increased corrosion protection, drum with additional special coating.
- Easy and quick mounting to consoles, even under lifting conditions.

Optional

- Stainless steel version (mat. 1.4301) for increased corrosion protection.



LB, zinc-plated version, capacity 1200 kg



LB, zinc-plated version, capacity 350 kg



LB-VA, stainless steel version, capacity 900 kg

INFO

For a better guiding of the rope to the suspension point we recommend the use of sheaves or sheave blocks, please see page 105.

Pfaff winches are not designed for passenger elevation applications and must not be used for this purpose.

Technical data LB

Model	Art.-No.	Capacity 1st layer kg	Capacity top layer kg	Rope diameter mm	Useable rope length 1st layer m	Useable rope length top layer m	Lift per crank rotation mm	Required crank effort daN	Weight without rope kg
LB 150 VZ	30239016	150	75	4[1]	0.8	11	125	17	4.2
LB 350 VZ	30239015	350	170	4[1]	1.8	20	125	25	4.8
LB 650 VZ	41239004	650	290	6[1]	1	20	55	22	7.3
LB 900 VZ	41239006	900	400	7[1]	0.8	14	58	24	10
LB 1200 VZ	42239008	1200	430	7[2]	1	26	45	24	12.1
LB 250 VA	32239017	250	125	4[1]	1.8	19.5	125	20	4.8
LB 650 VA	42239012	650	290	6[1]	1	20	55	22	7.6
LB 900 VA	32239013	900	320	7[1]	1	26	45	24	12.1

[1]recommended rope: DIN EN 12385 FE-znk 1770 sZ-spa [2]recommended rope: DIN EN 12385 SE-znk 2160 sZ-spa

Dimensions LB

Model	LB 150 VZ	LB 350 VZ	LB 650 VZ	LB 900 VZ	LB 1200 VZ	LB 250 VA	LB 650 VA	LB 900 VA
A, mm	–	–	232	232	273	–	232	273
B, mm	155	155	192	192	266	155	192	266
C, mm	175	175	210	210	240	175	210	240
Ø D, mm	36	36	63.5	63.5	63.5	36	63.5	63.5
Ø E, mm	100	100	183	183	255	100	183	255
F, mm	–	–	100	100	78	–	100	78
G, mm	75	75	58	58	75	75	58	75
H, mm	–	–	100	100	138	–	100	138
K, mm	159	189	192	192	192	191.5	190	190
L, mm	–	–	25	25	35	–	25	35
M, mm	45	75	38	38	30	75	38	30
N, mm	–	–	–	–	53	–	–	53
O, mm	200	320	250	320	320	320	250	250
P, mm	260	290	293	293	293	292.5	291	291
Q, mm	81	111	95	95	95	111	95	95
R, mm	50	80	50	50	50	80	50	50
S, mm	48	63	55	55	55	65.5	55	55

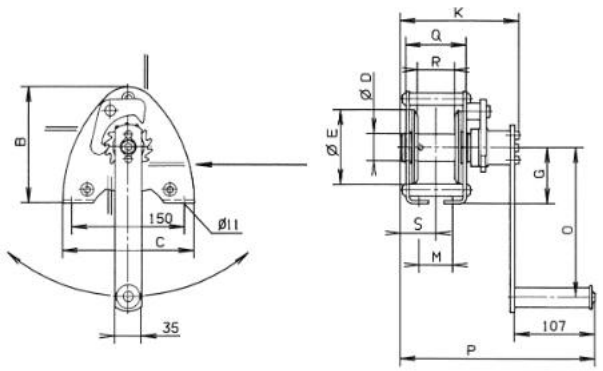

LB 150 - 350 kg

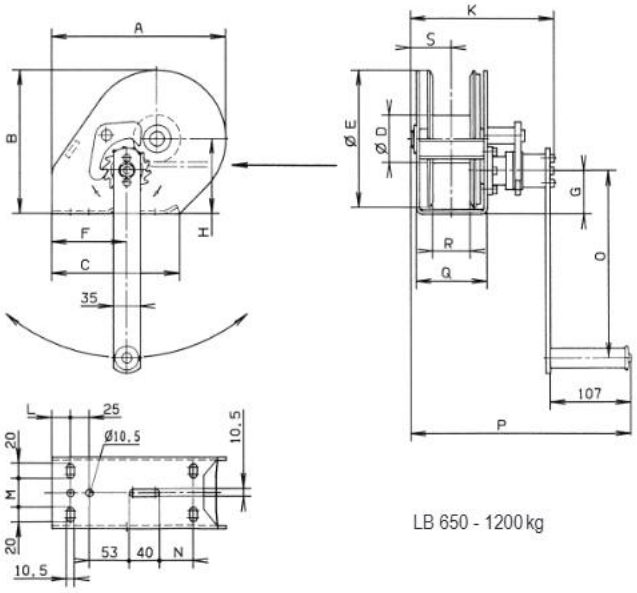

LB 650 - 1200 kg