EGV PSL II
Electric pedestrian stacker

Capacity 1200 kg,
Fork height max. 3500 mm

The revised EGV PSL II is the ideal solution for indoor transportation and of palletized goods within a warehouse environment for short haul and medium work load applications.

Features

- The wide mast and the laterally, ergonomic tiller ensure a free view onto the goods as in front of the stacker.
- All functions are comfortably controlled from the tiller head.
- The reduced overall width of 800 mm improves the handling of goods in narrow spaces and corridors.
- Ultra-slow drive function enables exact driving in very tight spaces.
- Easy maintenance – the convenient access opening at the bottom of the forklift allows an immediate disassembly of motor wheel without lifting the machine.
- Improved drive- and lifting speed.
- The spiral charging cable which can be stored in the chassis enables easy charging at every socket.



Optional

Plus version

- Maintenance-free Gel batteries with increased working hours and a doubled lifetime expectancy.
- Finely metered lifting and lowering due to a soft valve control.
- Faster lowering speed.

Freelift version

- The EGV PSL 1229 II plus Freelift has a fullfreelift. It can lift the forks up to 1500 mm without increasing the base mast height.

Scope of delivery

- Battery and battery charger included.

Technical data EGV PSL II

Model	EGV PSL 1225 II	EGV PSL 1229 II	EGV PSL 1235 II
Art.-No.	192033602	192033615	192033616
Actuation	electric	electric	electric
Operation	pedestrian	pedestrian	pedestrian
Capacity (up to 2.5 m lift), kg	1200	1200	1200
Load center c, mm	600	600	600
Wheelbase y, mm	1234	1234	1234
Weight (with battery), kg	568	583	616
Tyre type [1]	PUR/VG + PUR	PUR/VG + PUR	PUR/VG + PUR
Steering rollers, mm	250 x 76 + 100 x 38	250 x 76 + 100 x 38	250 x 76 + 100 x 39
Load rollers, mm	82 x 70	82 x 70	82 x 70
Number of wheels/load rollers (x=driven)	1x + 1/2	1x + 1/2	1x + 1/2
Height, mast retracted h1, mm	1787	1987	2250
Freelift h2, mm	–	–	80
Stroke, mm	2410	2810	3410
Height, mast extended h4, mm	2992	3392	3916
Fork height max. h3, mm	2500	2900	3500
Height of control handle min./max. h14, mm	915/1310	915/1310	915/1310
Fork height lowered h13, mm	90	90	90
Overall length L1, mm	1760	1760	1760
Length incl. apron L2, mm	609	609	609
Overall width b1/b2, mm	800	800	800
Fork height s, mm	70	70	70
Fork width e, mm	150	150	150
Fork length l, mm	1150	1150	1150
Outside dimension of forks b5, mm	560	560	560
Ground clearance m2, mm	20	20	20
Aisle width pallet Ast, mm	2210	2210	2210
Turning circle radius Wa, mm	1430	1430	1430
Travel speed with/without load, km/h	4.7/5.2	4.7/5.2	4.7/5.2
Lifting speed with/without load, m/s	0.11/0.19	0.11/0.19	0.11/0.19
Lowering speed with/without load, m/s	0.12/0.15	0.12/0.15	0.12/0.15
Gradient with/without load, %	5/10	5/10	5/10
Service brake	electric	electric	electric
Drive motor rating, kW	0.7	0.7	0.7
Hoist motor rating, kW	2.2	2.2	2.2
Battery	starter	starter	starter
Battery charger, V/A	24/13	24/13	24/13
Battery voltage, V/Ah	24/85	24/85	24/85

[1] PUR … Polyurethane, VG … Solid rubber

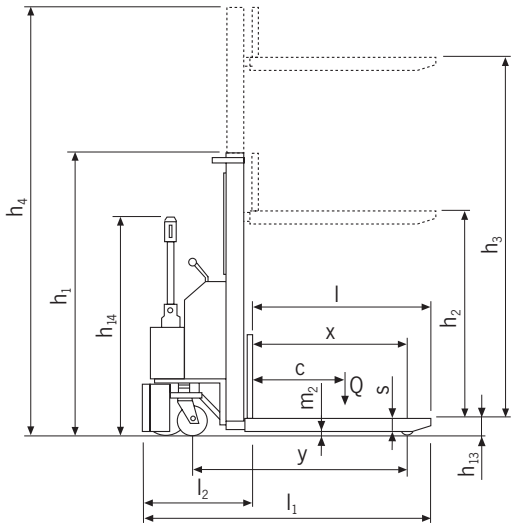

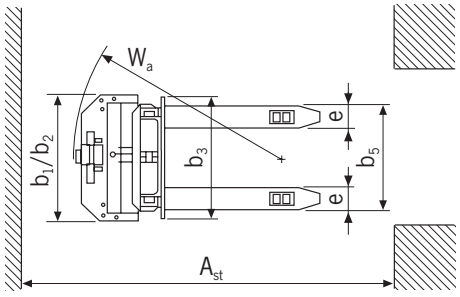

Technical data EGV PSL II plus und EGV PSL II plus Freelift

Model	EGV PSL 1225 II plus	EGV PSL 1229 II plus	EGV PSL 1235 II plus	EGV PSL 1229 II plus Freelift
Art.-No.	192033617	192033618	192033620	192033621
Actuation	electric	electric	electric	electric
Operation	pedestrian	pedestrian	pedestrian	pedestrian
Capacity (up to 2.5 m lift), kg	1200	1200	1200	1200
Load center c, mm	600	600	600	600
Wheelbase y, mm	1234	1234	1234	1234
Weight (with battery), kg	648	663	696	693
Tyre type [1]	PUR/VG + PUR	PUR/VG + PUR	PUR/VG + PUR	PUR/VG + PUR
Steering rollers, mm	250 x 76 + 100 x 40	250 x 76 + 100 x 41	250 x 76 + 100 x 42	250 x 76 + 100 x 43
Load rollers, mm	82 x 70	82 x 70	82 x 70	82 x 70
Number of wheels/load rollers (x=driven)	1x + 1/2	1x + 1/2	1x + 1/2	1x + 1/2
Height, mast retracted h1, mm	1787	1987	2250	1965
Freelift h2, mm	0	0	80	1402
Stroke, mm	2410	2810	3410	2810
Height, mast extended h4, mm	2992	3392	3916	3372
Fork height max. h3, mm	2500	2900	3.500	2900
Height of control handle min./max. h14, mm	915/1310	915/1310	915/1310	915/1310
Fork height lowered h13, mm	90	90	90	90
Overall length L1, mm	1760	1760	1760	1760
Length incl. apron L2, mm	609	609	609	609
Overall width b1/b2, mm	800	800	800	800
Fork height s, mm	70	70	70	70
Fork width e, mm	150	150	150	150
Fork length l, mm	1150	1150	1150	1150
Outside dimension of forks b5, mm	560	560	560	560
Ground clearance m2, mm	20	20	20	20
Aisle width pallet Ast, mm	2210	2210	2210	2210
Turning circle radius Wa, mm	1430	1430	1430	1430
Travel speed with/without load, km/h	4.7/5.2	4.7/5.2	4.7/5.2	4.7/5.2
Lifting speed with/without load, m/s	0.11/0.19	0.11/0.19	0.11/0.19	0.11/0.19
Lowering speed with/without load, m/s	0.19/0.19	0.19/0.19	0.19/0.19	0.16/0.14
Gradient with/without load, %	5/10	5/10	5/10	5/10
Service brake	electric	electric	electric	electric
Drive motor rating, kW	0.7	0.7	0.7	0.7
Hoist motor rating, kW	2.2	2.2	2.2	2.2
Battery	Gel	Gel	Gel	Gel
Battery charger, V/A	24/13	24/13	24/13	24/13
Battery voltage, V/Ah	24/105	24/105	24/105	24/105

[1] PUR … Polyurethane, VG … Solid rubber

