

HU 25-115 FBTP PROLINE
Hand pallet truck with driving and parking brake

Capacity 2500 kg

For the professional transportation of palletised goods and box pallets, on ramps, ascending slopes and on lorries.

Features

- Ergonomic safety control handle for one-hand operation of lifting, driving and lowering.
- Ergonomic rubber control handle for safe handling.
- Driving and park brake comfortably operated from the control handle.
- Low maintenance high performance hydraulic pump with hard chromium plated piston and pressure relief valve.
- Frame and forks in robust steel construction, adjustable connecting rods, especially hardened axles and the high quality powder coating ensure a long life expectancy.
- Steering angle of 105 degree to each side for easy handling in confined spaces.

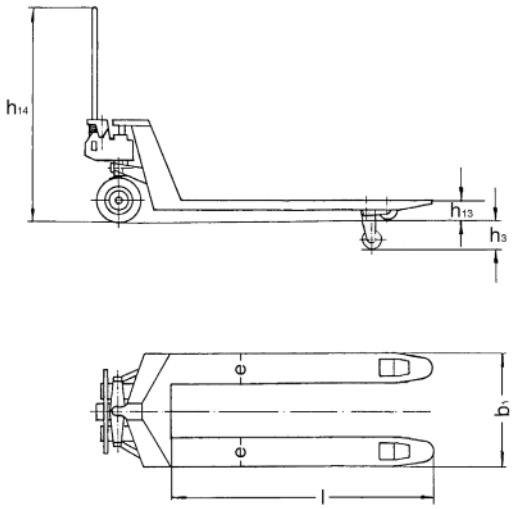

Technical data 25-115 FBTP

Model	HU 25-115 FBTP
Art.-No.	34527135
Capacity, kg	2500
Weight, kg	86
Tyre type[1]	VG/PUR
Steering rollers, mm	180 x 50
Load rollers, mm	82 x 70
Stroke h3, mm	115
Height of control handle h14, mm	1200
Fork height lowered h13, mm	85
Fork width e, mm	160
Fork length l, mm	1150
Outside dimension of forks b1, mm	540

[1]PUR… Polyurethane, VG… Solid rubber