

Rotating hand chain guide!

360°

EXPERIENCE THE ADVANTAGE OF 360°

We are pleased to send you our new Atex catalogue in PDF format.

INFO

Easy modification from Yalelift 360 to Yalelift IT is possible.

Yale*lift 360*

Hand chain hoist

Capacity 500 - 10000 kg

Areas of operation as well as operator conditions have been improved far beyond those of a classical hand chain hoist.

Features

- The enclosed robust stamped steel housing protects all internal components even in the toughest conditions.
- The extremely low headroom allows maximum use of the lifting height.
- The revolutionary 360° rotating hand chain guide allows the operator to work from virtually any position, in confined spaces or above the load. The Yalelift can even be operated from the side of the load which also makes it possible to use the hoist for horizontal pulling or tensioning. Due to the additional flexibility, the operator is no longer forced to work in the danger zone near the load.
- The brake system is extremely quiet and guarantees operational safety and improved serviceability due to omission of the vulnerable ratchet pawls. All parts are made of high quality materials, additionally zinc-plated or yellow-chromated to increase corrosion prevention.
- Chain guide and gearbox are almost totally enclosed. Even under the toughest conditions the internal gearbox remains protected.
- The hardened load sheave with four precision machined pockets ensures accurate movement of the load chain.
- The surface protected zinc-plated alloy steel load chains fulfil all requirements of current national and international standards and regulations. They are optimally matched to the load sprocket and ensure safe and long-lasting operation of the unit.
- Forged load and suspension hooks that yield under overoad instead of breaking, are made of high tensile steel. The hooks are fitted with robust safety latches and rotate 360°.

Optional

- Adjustable overload protection device.
- Chain container
- Corrosion resistant version.

Yale*lift 360*

Hand chain hoist, 20 t

Capacity 20000 kg

In spite of its high capacity, the Yale*lift 360* 20 t features a compact design.

Features

- All components are made of high quality materials, some components are zinc-plated or yellow-chromated for added corrosion protection. This ensures that also heaviest loads are held reliably.
- The enclosed robust stamped steel body resists in the toughest conditions and allows outside operation.
- The hardened load sheave with five precision machined pockets ensures accurate movement of the load chain.
- The low headroom (hook-to-hook dimension 1065 mm) allows maximum use of the lifting height.
- The Yale*lift 360* 20 t is equipped with six chain falls only which results in higher speed and lower weight.

Optional

- Adjustable overload protection device.
- Chain container
- Corrosion resistant version.



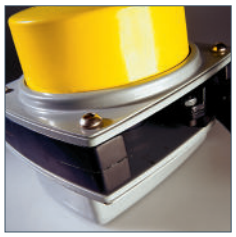

The robust stamped steel housing with four stay bolts is resistant to the toughest working conditions.



Chain guide

UPGRADE

SIMPLE & FLEXIBLE

FROM Yale*lift 360* TO Yale*lift* IT

Technical data Yale*lift 360*

Model	Art-No.	Capacity kg	Number of chain falls	Chain dimensions d x p in mm/ design	Lift per 1 m hand chain overhaul mm	Handle pull at WLL daN	Weight at standard lift (3 m) kg
YL 500	N04700109	500	1	5 x 15 - T	33	21	9
YL 1000	N04700110	1000	1	6 x 18 - T	20	30	13
YL 2000	N04700111	2000	1	8 x 24 - T	14	32	21
YL 3000	N04700112	3000	1	10 x 30 - V	12	38	34
YL 5000	N04700113	5000	2	10 x 30 - T	6	34	48
YL 10000	N04700075	10000	3	10 x 30 - V	4	44	71
YL 20000	N04700077	20000	6	10 x 30 - V	2	2 x 44	196

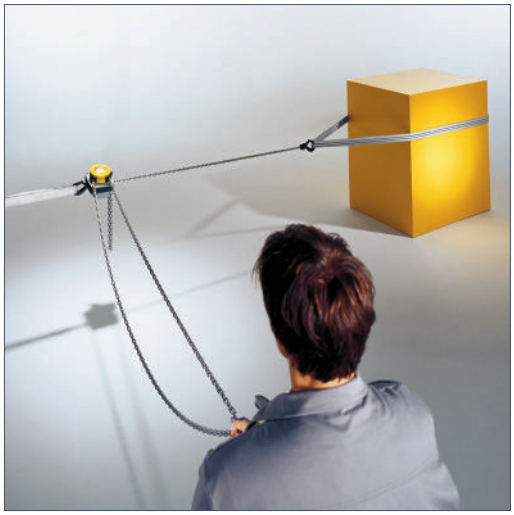





Dimensions Yale*lift 360*

Model	YL 500	YL 1000	YL 2000	YL 3000	YL 5000	YL 10000	YL 20000
A min., mm	300	335	395	520	654	825	1.065
B, mm	17	22	30	38	45	68	85
C, mm	24	29	35	40	47	68	64
D, mm	133	156	182	220	220	220	303
E, mm	148	175	203	250	250	383	555
F, mm	148	167	194	219	219	219	250
G, mm	139	164	192	225	242	326	391
H, mm	206	242	283	335	352	436	501
I, mm	24	24	31	34	21	136	–
K, mm	61	70	83	95	95	95	396
L, mm	87	97	111	124	124	124	125
M, mm	110	125	156	178	285	401	471
N, mm	14	19	22	30	37	50	56

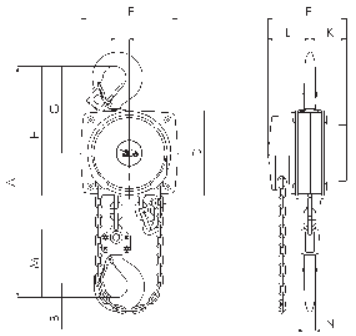

Yale*lift 360*, 500 - 3000 kg, single fall

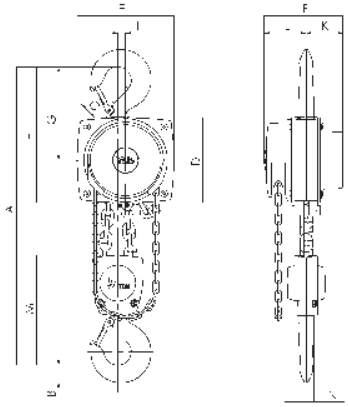

Yale*lift 360*, 5000 kg, double fall

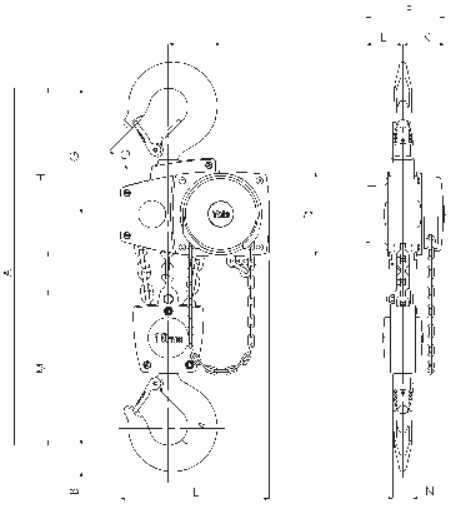

Yale*lift 360*, 10000 kg, three falls

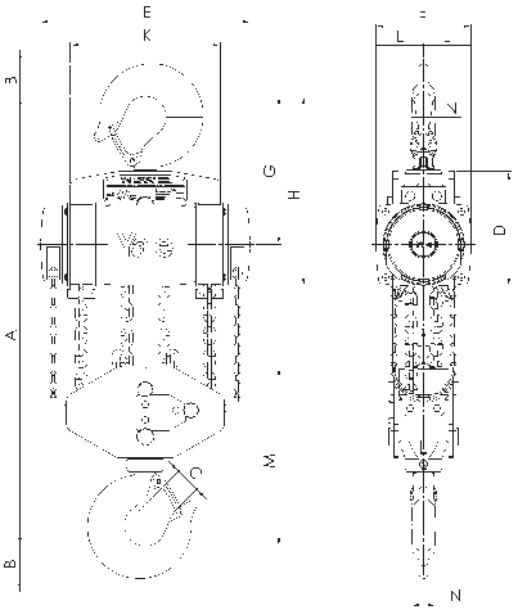

Yale*lift 360*, 20000 kg, six falls